Experimental- theoretical study of Spray combustion in the small Jet Engines

Yeshayahou Levy, Valery Sherbaum, Vladimere Erenburg
Valery Nadvany, Vitali Ovcherenko

Turbo and Jet Jet Engines Laboratory
Technion

Technion, Israel
e-mail: levyy@aerodyne.technion.ac.il

DEVELOPMENT OF ATOMIZATION SYSTEMFOR SMALL JET ENGINES (T<1000Nt)

Olympus (AMT)

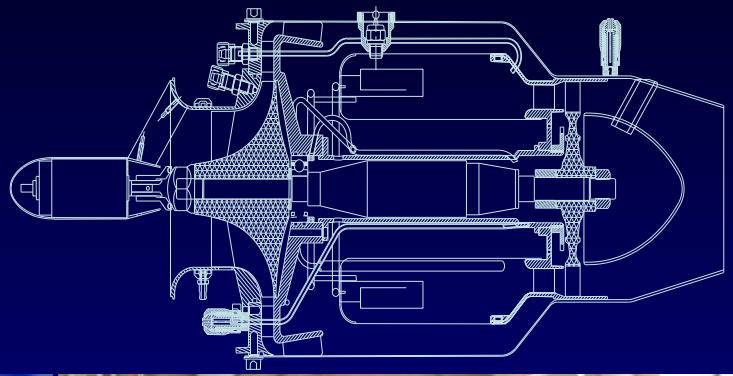

Turbo and Jet Engine Laboratory
Technion – Israel
www. jet-engine-lab.technion.ac.il

The work included the following stages

1. Experimental study of the atomization.
2. Development of the air-blast atomizers with axial and radial air swirlers.
3. Spray Dynamics study by CFD.
4. Preliminary combustion study with the air-blast atomizers

Turbo and Jet Engine Laboratory
Technion – Israel
www. jet-engine-lab.technion.ac.il

Development of the air-blast atomizers with axial and radial air swirlers.

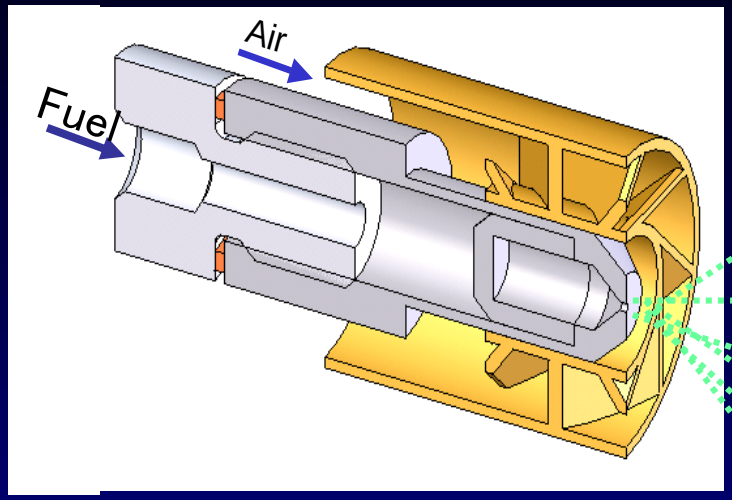

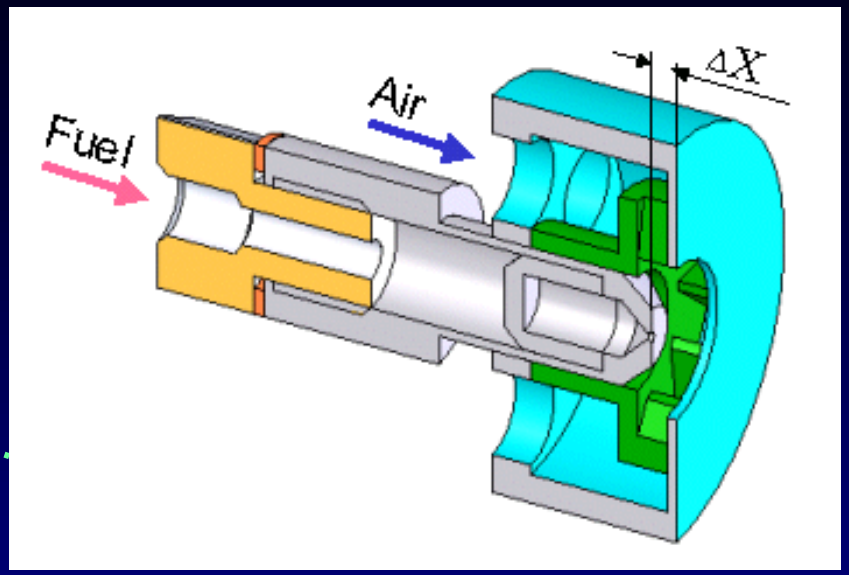

Axial air swirler dimensions:

Vanes inclination: 45°

Swirler OD: 13 mm

Swirler ID: 7 mm

Liquid nozzle assembly OD: 6mm

Radial air swirler dimensions:

OD: 14 mm,

ID: 8 mm,

Vanes Height: 1.5 mm,

Ring Cover Thickness: 1 mm.

4 Air-assist atomizer with axial air swirler

TASK: TO DEVELOPE A WIDE ANGLE ATOMIZER WITH SMALL DROPLETS

By the study of:

1. Liquid bubble dynamics and sheet and droplets performance.

2. Pressure field at the atomizer exit.

Turbo and Jet Engine Laboratory
Technion – Israel
www. jet-engine-lab.technion.ac.il

TEST CONDITIONS:

Liquid and air have co-rotated direction (for better atomization),

air pressure drop: 0 - 0.1 bars,
water pressure drop: 1.2 - 6 bars,
air / liquid mass flow ratio: 1 – 4.

Exit velocity (at exit cross-section):
10 m/s to 40 m/s for the axial air swirler
40 m/s to 115 m/s for the radial.
Both, water and kerosene were used.

PHASE DOPPLER ANEMOMETER FOR MEASURING:

- droplet size,
- axial velocity (droplets and air),
- liquid flux

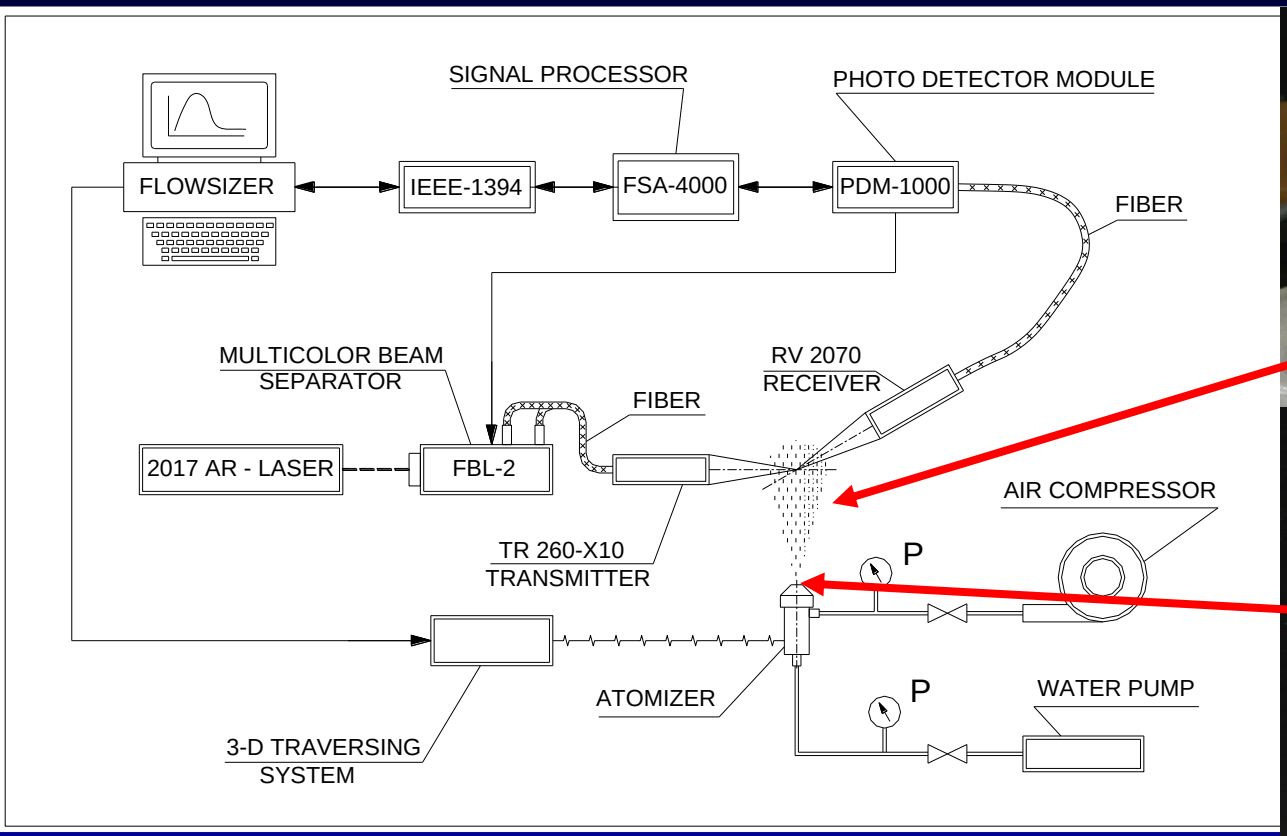

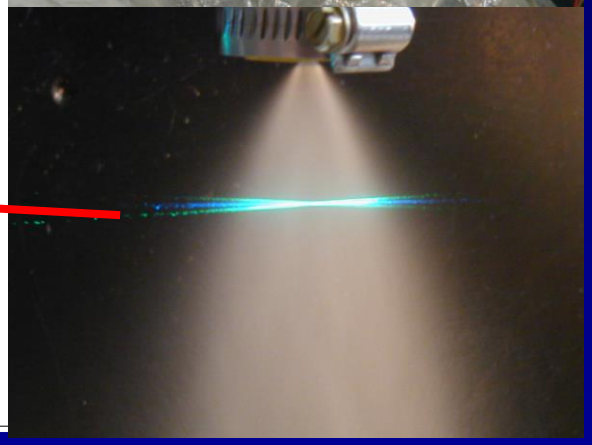

Experimental set-up: PDA

Turbo and Jet Engine Laboratory
Technion – Israel
www. jet-engine-lab.technion.ac.il

LOW LIQUID PRESSURE

- spray is opened due to static pressure difference
- The spray angle can become very large (Even at low air velocity < 20 m/s)
- This phenomena enables to achieve large cone angle (>120º) and provides fine atomization.

- This effect was not described earlier.
- We now try to use it in our small combustor design where fuel pressure should be very low.

Spray cone at the simplex atomizer, ΔP_L = 5 bars.

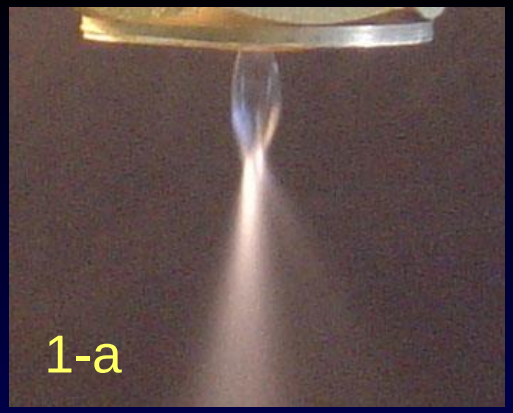

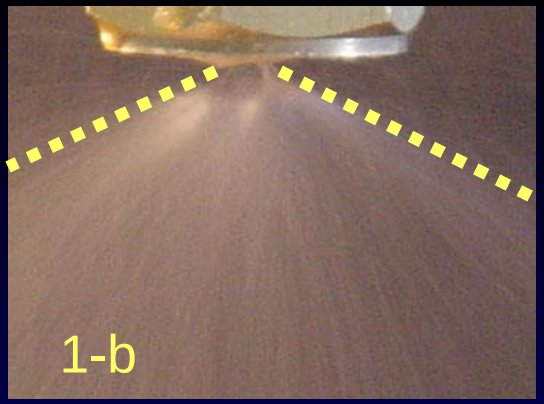

Atomization modes,

(a) ΔP_L = 1.4 bars, ΔP_A = 0;

(b) ΔP_L = 1.4 bars, ΔP_A = 0.76 millibar.

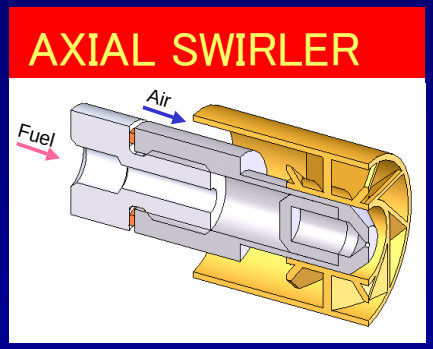

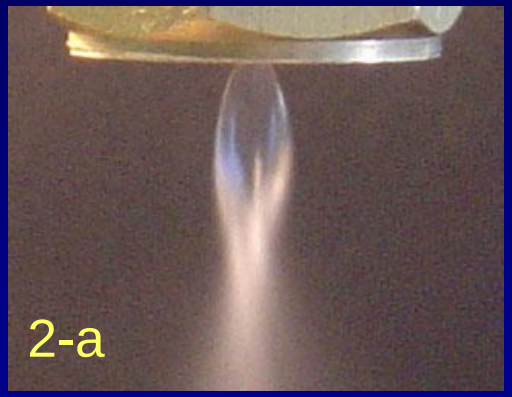

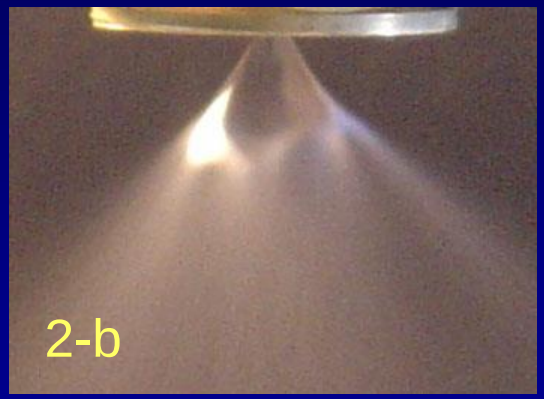

Atomization modes,

(a) ΔP_L = 1.7 bars, ΔP_A = 0;

(b) ΔP_L = 1.7 bars, ΔP_A = .51millibar;

Cone angle, air-assist atomizer

Turbo and Jet Engine Laboratory
Technion – Israel
www. jet-engine-lab.technion.ac.il

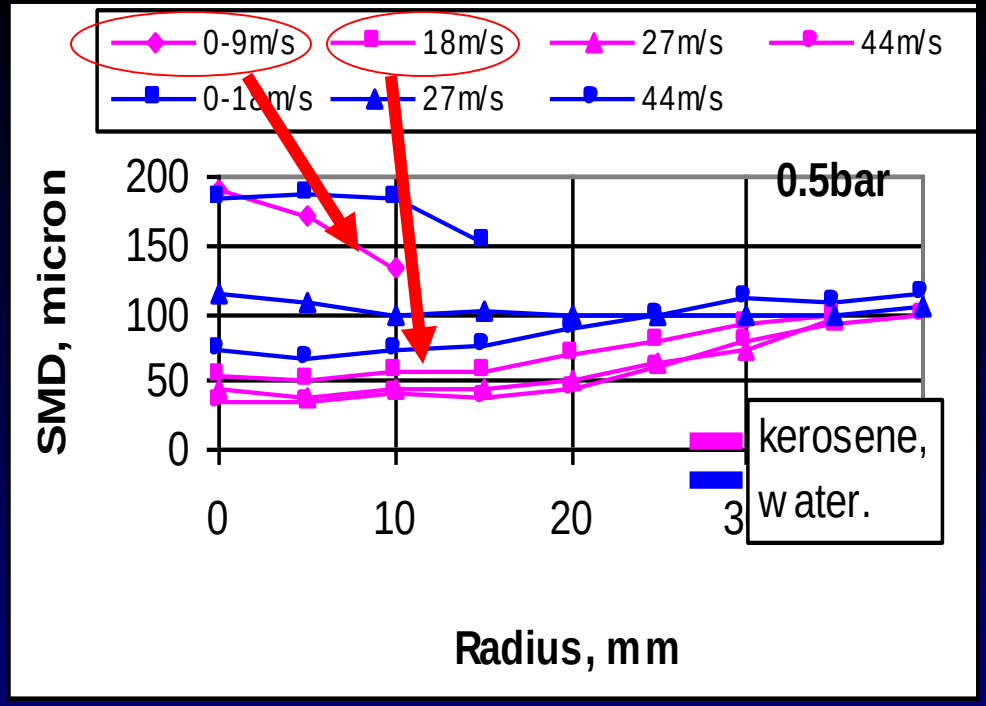

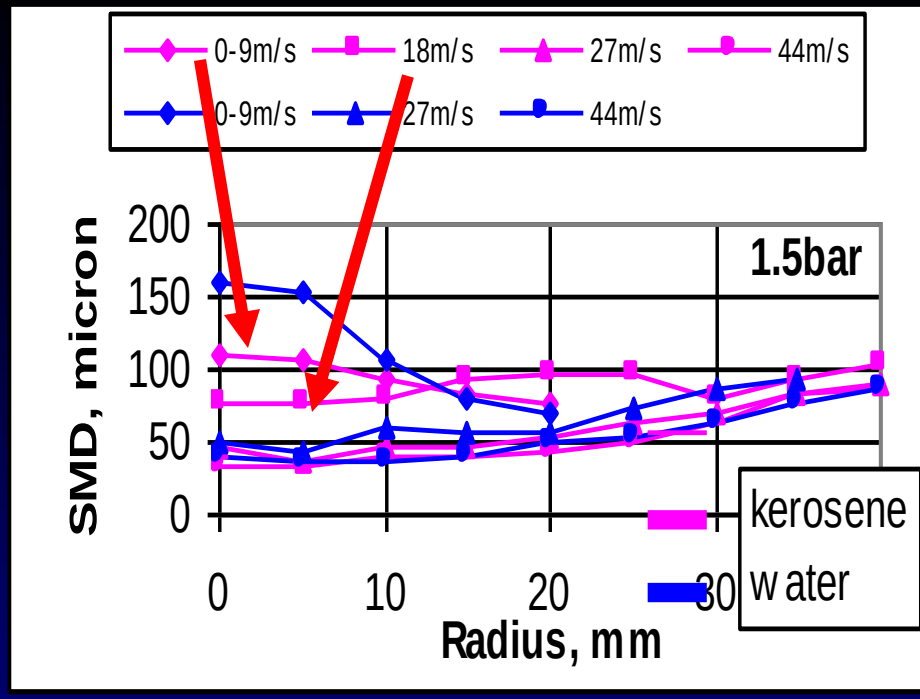

Step-shaped change of droplet size with air velocity

The collapse of jet takes place even at the low liquid pressure drop and at the low air velocity

SMD comparison for kerosene and water

CFD SIMULATION

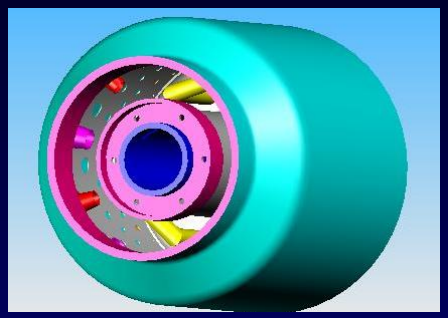

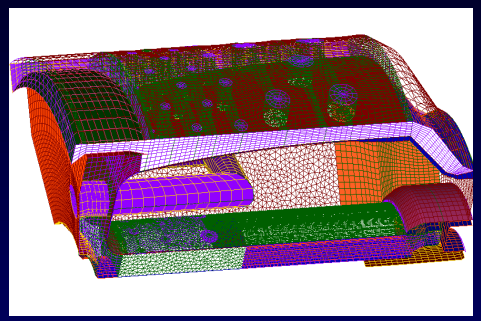

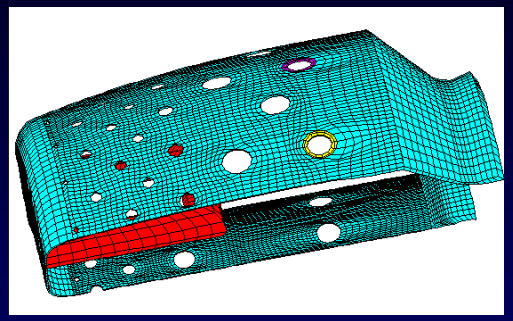

A 60^0 sector view at STAR-CD.

5 solid cell types with 18,948 cells

32 fluid cell types with 525,35 cells

436,11 tetrahedrals, 92,767 hexahedrals, 14,833 pyramids

184,478 vertices, 22,675 boundary cells

Air Inlet: =0.485 kg/sec, T_{03} =498 K P_{03} = 0.425 Mpa, ρ =2.923 kg/m^3

Fixed mass flux boundary condition.

Fuel Inlet (propane): m =0.011 kg/sec (for the whole combustor)

T =373 ° K ρ =6.013 kg/m^3

Fixed mass flux boundary condition.

Solid: k =43 W/(m K) ρ =7800 kg/m^3 Cp = 473 KJ/(kg K)

Turbulence Model: k-Epsilon/High Reynolds Number

Chemical Reaction Type: Non-premixed

Reaction Model: Hybrid EBU/Chemical kinetics

Reaction System (propane fuel, Two steps reaction):

$$C_3H_8 + 3.5O_2 \rightarrow 3CO + 4H_2O$$

$$CO + 0.5O_2 \rightarrow CO_2$$

Solution Method: Steady State SIMPLE

Differencing Schemes: MARS

Simulation conditions

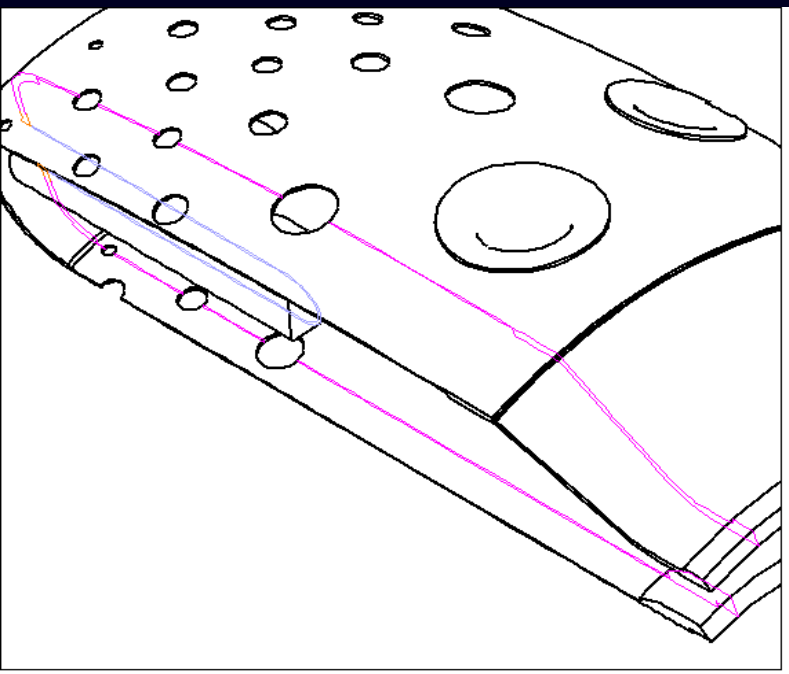

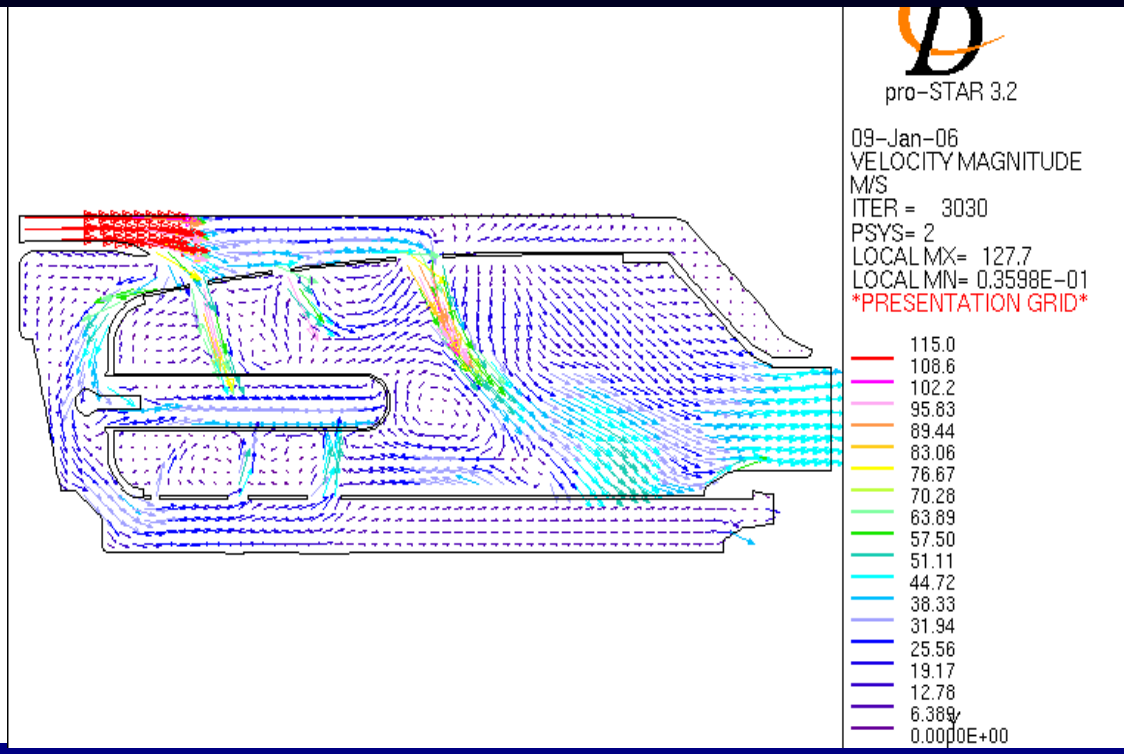

Velocity field at the second lengthwise section, (cold flow)

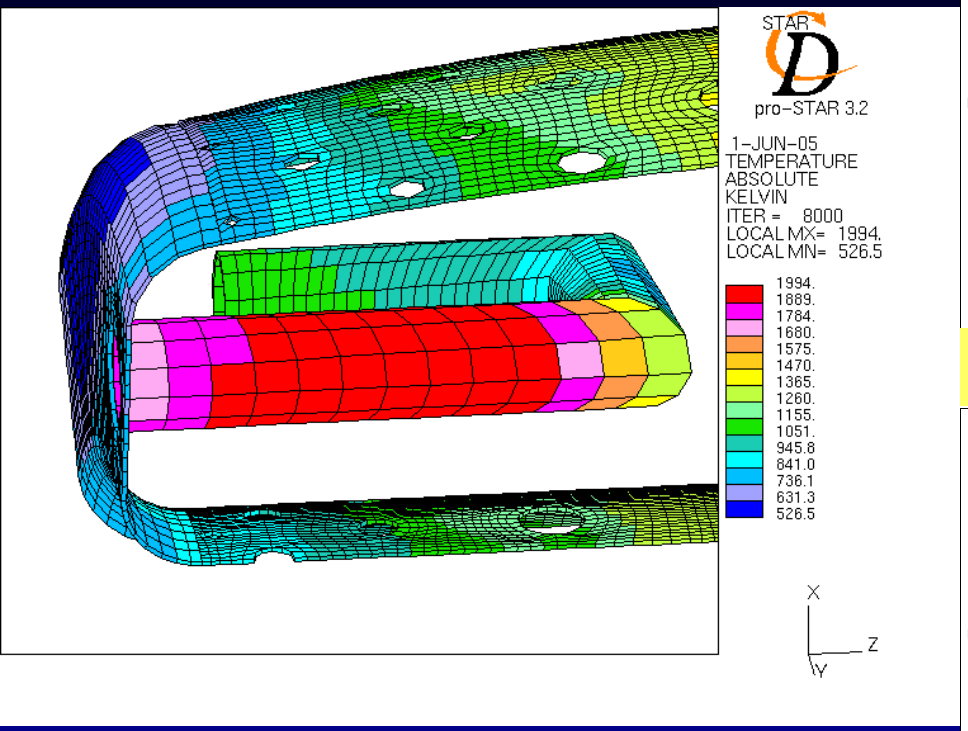

NEAR WALL GAS TEMPERATURE

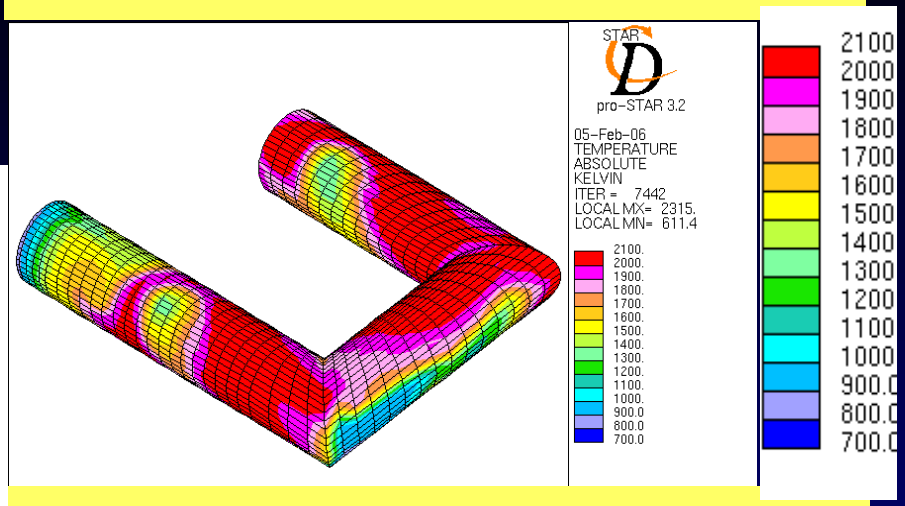

WALL (METAL) TEMPERATURE

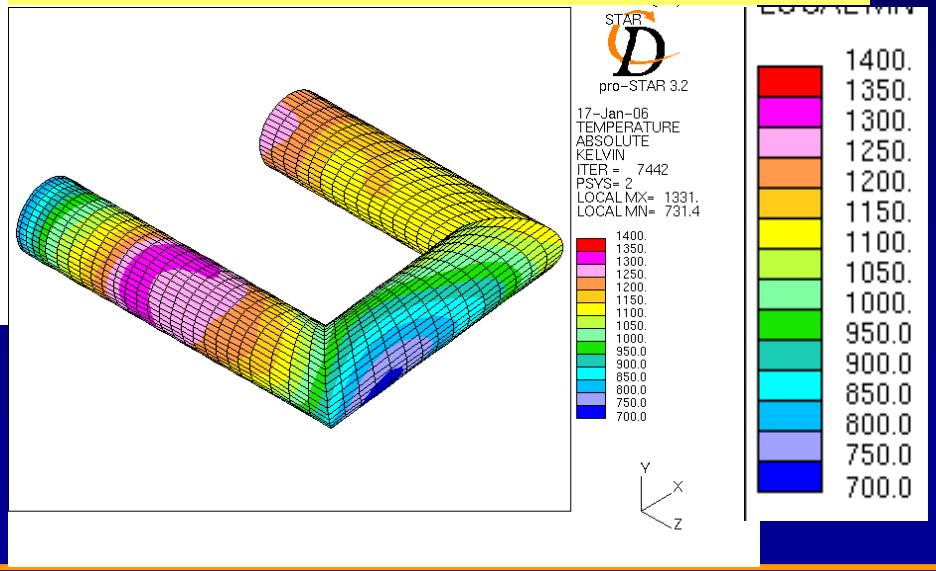

ATOMIZATION STUDY BY CFD

Mesh building: SOLID WORKS, STAR DESIGN

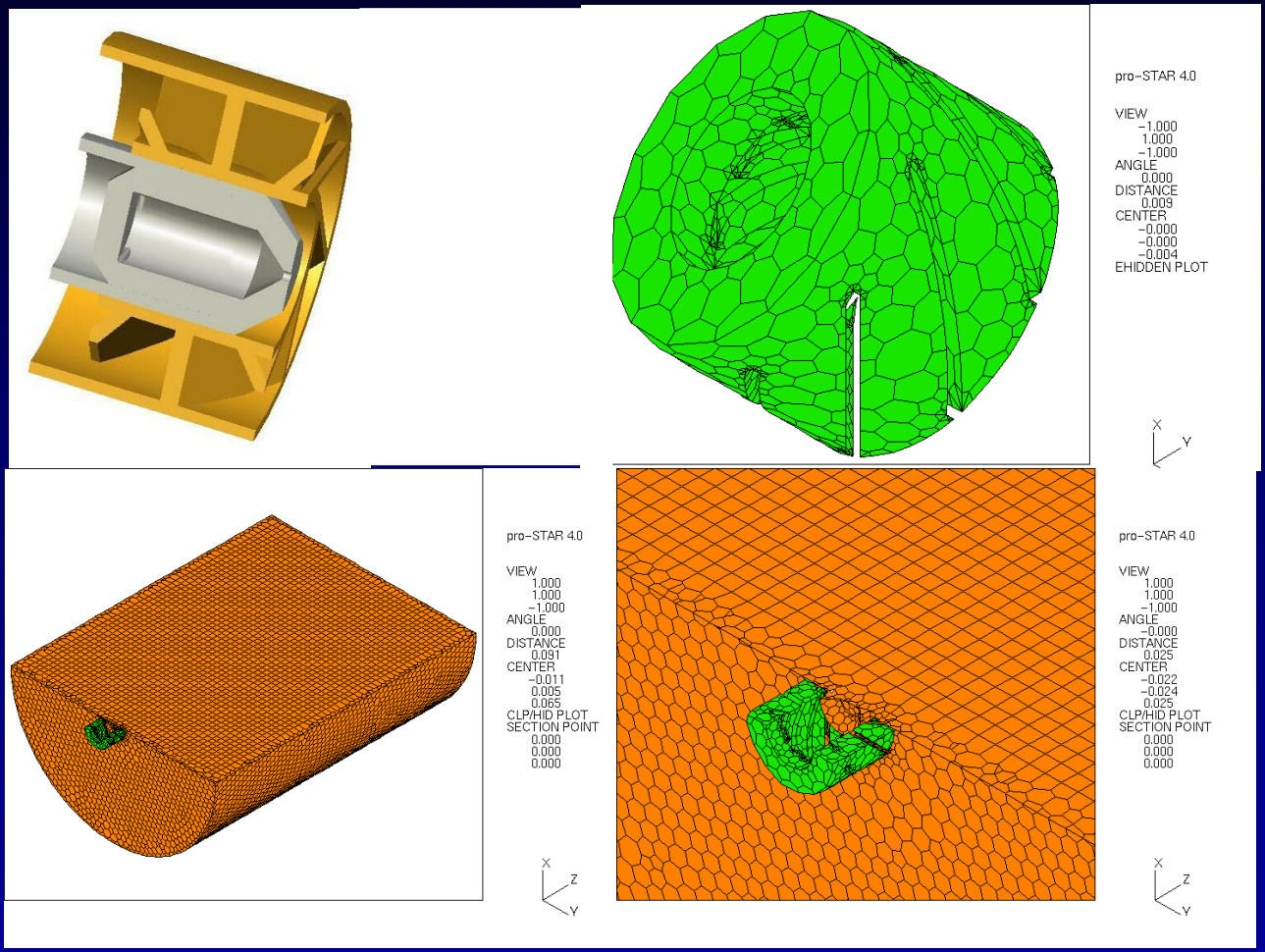

Turbo and Jet Engine Laboratory
Technion – Israel
www. jet-engine-lab.technion.ac.il

CFD SIMULATION WITHOUT SWIRLER

Generic atomizer

Heptane (C_7H_{16}) was used as a fuel
Fuel temperature was 300 K.
The fuel /air ratio was equaled to 0.01
Mono-size spray with droplet diameter of 30 microns.
Droplet velocity was equal 42 m/s
Total spray cone is equal to 90^0
Secondary break-up simulation (Reitz and Diwakar model)
Laminar and turbulent flows are simulated

Turbo and Jet Engine Laboratory
Technion – Israel
www. jet-engine-lab.technion.ac.il

SPRAY TRAJECTORIES, TURBULENT FLOW

Spray is pressed against inlet wall due to reverse air.

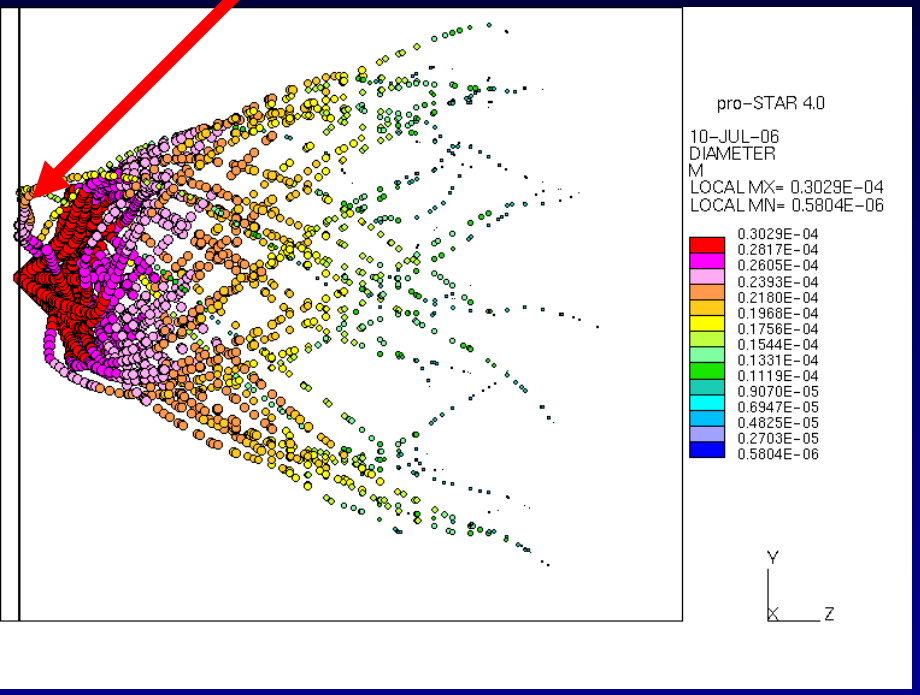

longitudinal section

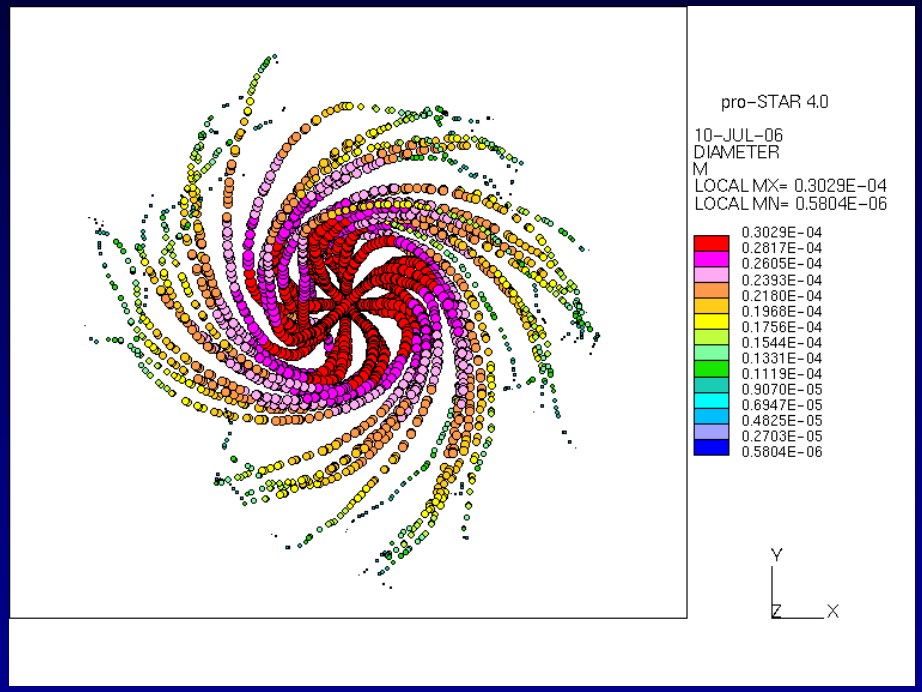

cross section

Turbo and Jet Engine Laboratory
Technion – Israel
www. jet-engine-lab.technion.ac.il

SPRAY – VORTEX INTERACTION

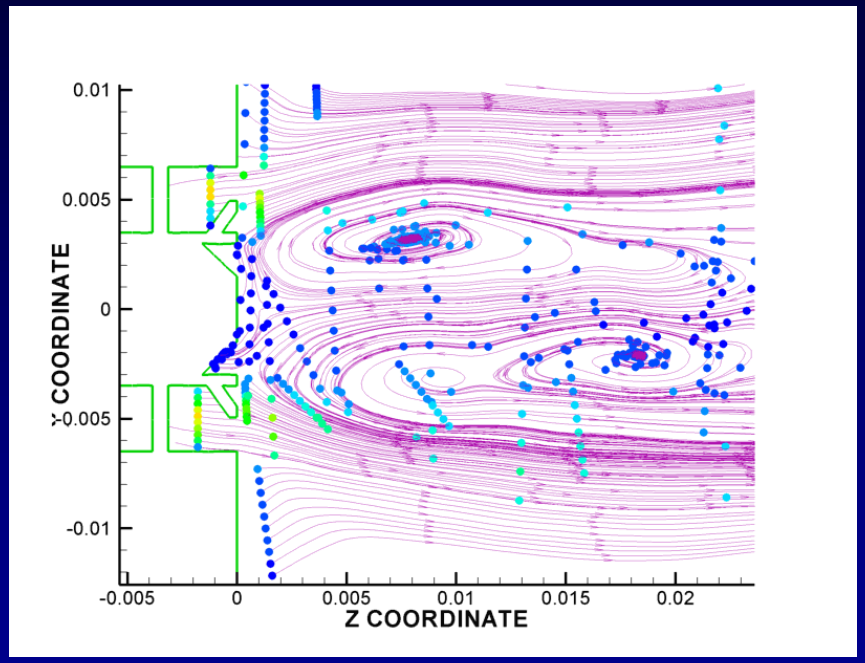

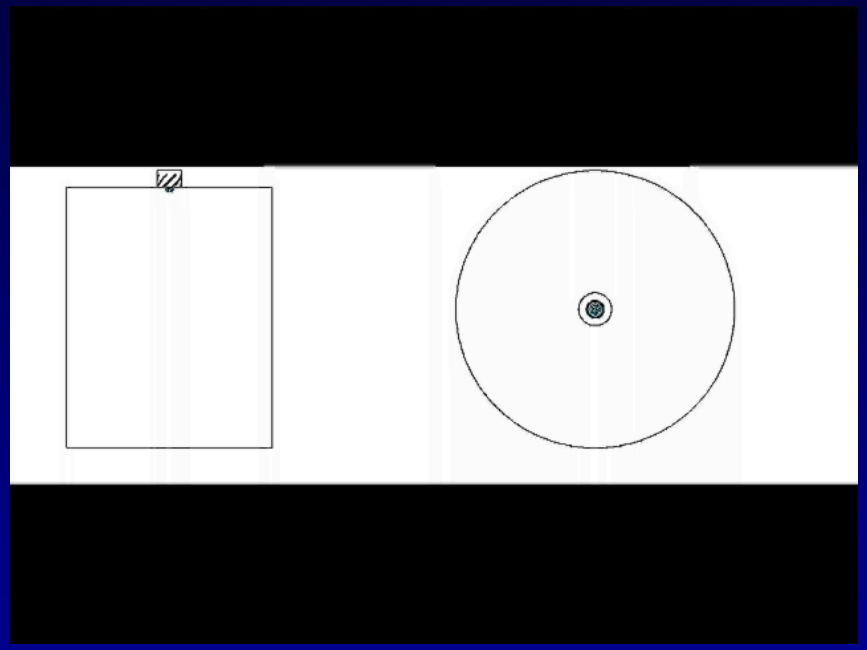

Turbo and Jet Engine Laboratory
Technion – Israel
www. jet-engine-lab.technion.ac.il

Droplets' combustion

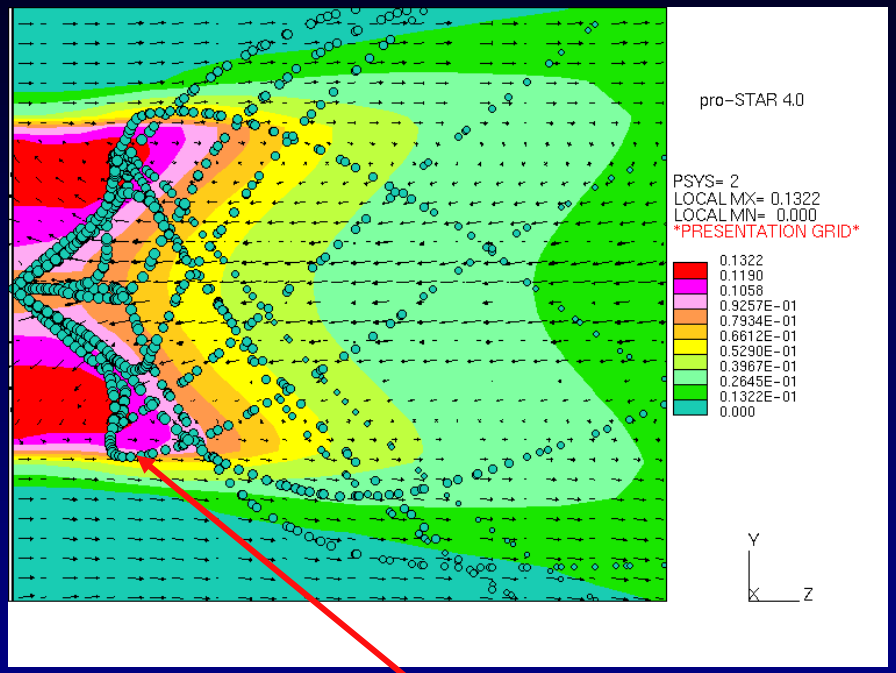

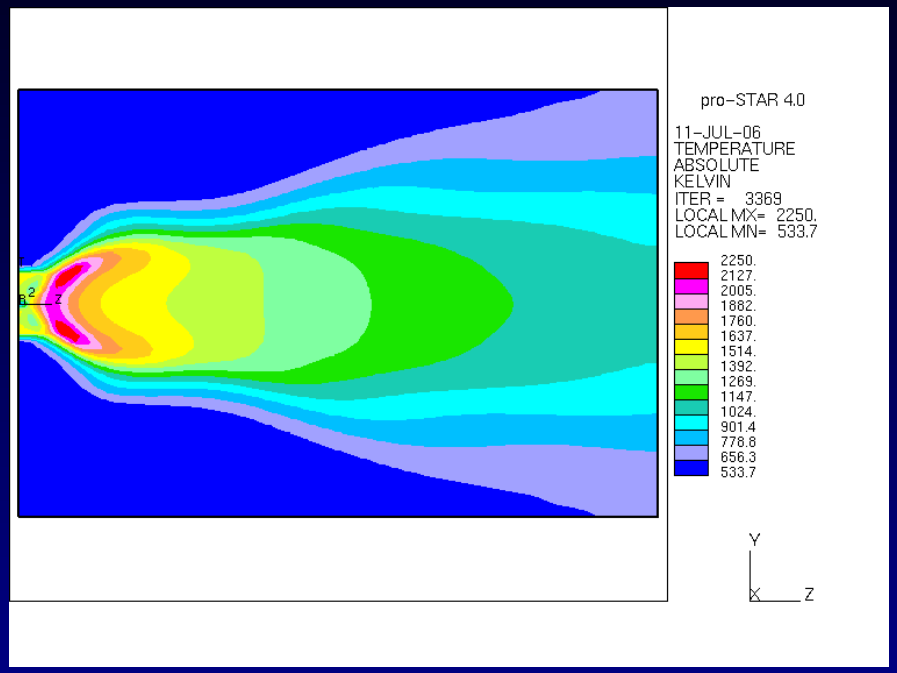

Reverse flow drags droplets backwards

PRELIMINARY STUDY OF THE COMBUSTOR WITH THE AIR–BLAST ATOMIZERS

Atomization process inside a combustor - Transparent combustor model.\

1. GASTURB simulations (combustor operational regime) .
2. Modification of holes (number, diameter and swirler size).

Turbo and Jet Engine Laboratory
Technion – Israel
www. jet-engine-lab.technion.ac.il

ATOMIZATION PROCESS INSIDE A COMBUSTOR

The “OLYMPUS” combustor was modified (number & diameter of holes in primary zone)

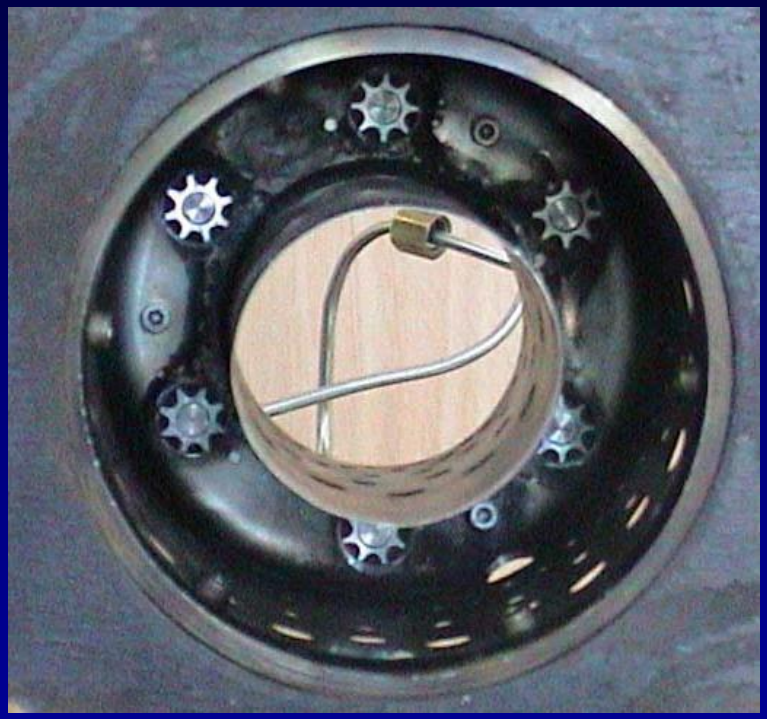

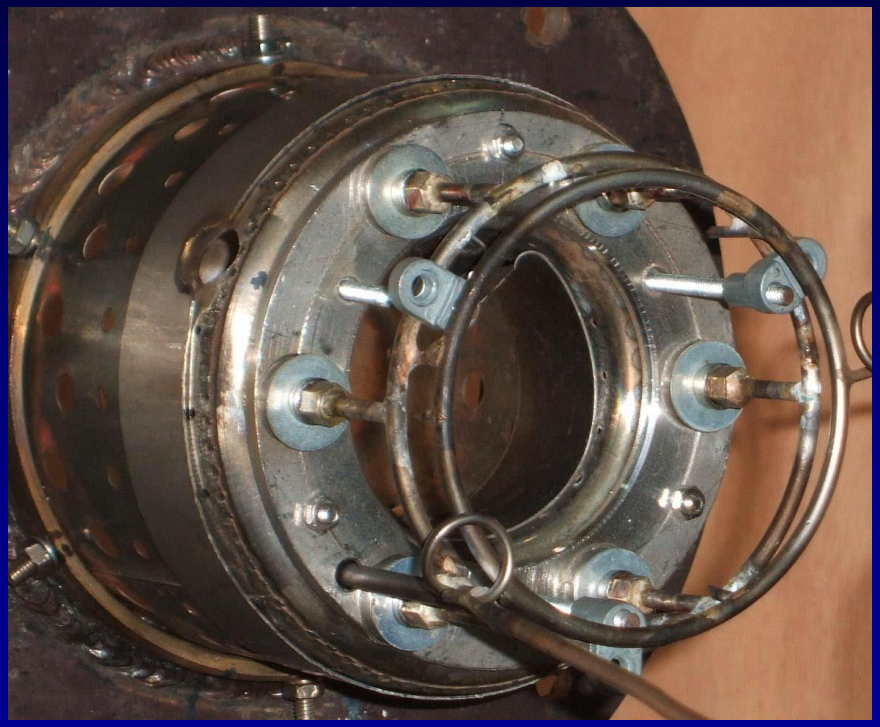

General view of the modified combustor

Turbo and Jet Engine Laboratory
Technion – Israel
www. jet-engine-lab.technion.ac.il

PRELIMINARY TEST RESULTS:

Modification of holes number, their diameter and swirler size.

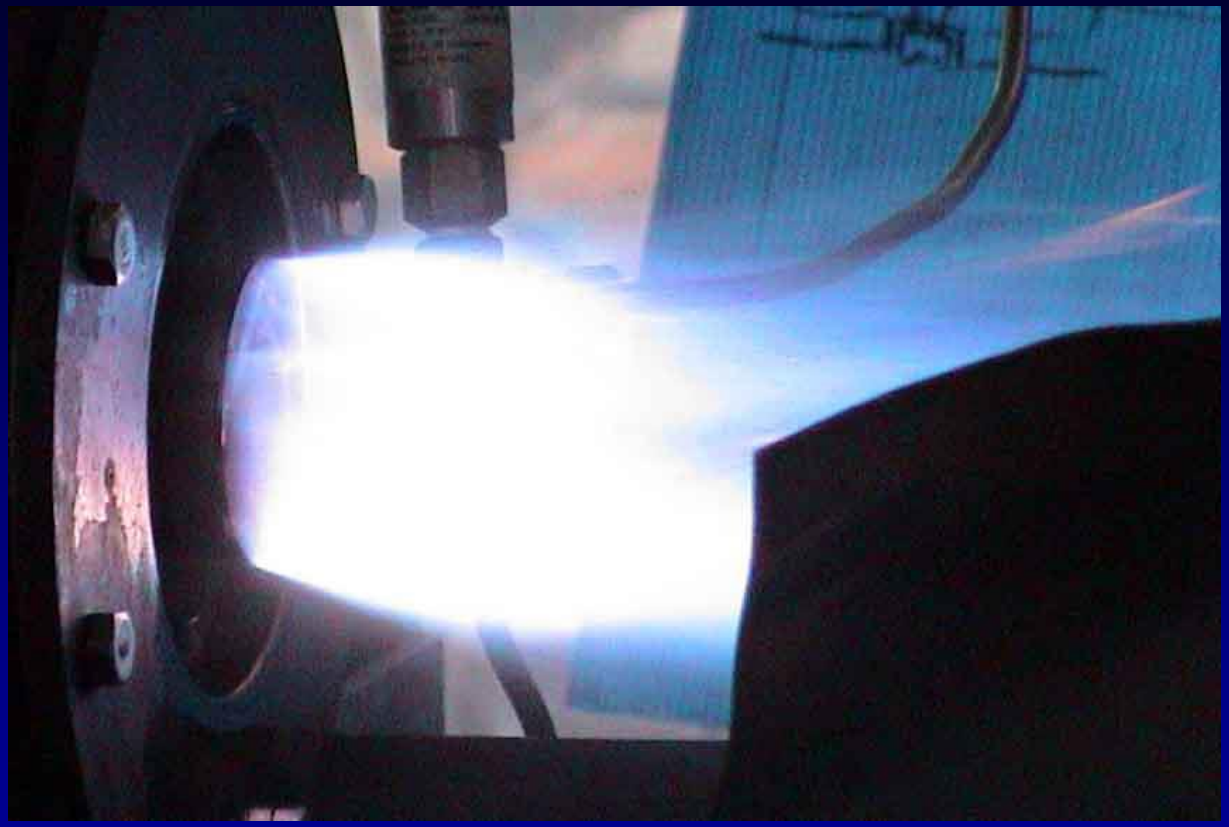

Test showed that the original primary zone is not adequate to accommodate the swirl atomizers – result was incomplete combustion.

Fuel burns downstream of combustor

Turbo and Jet Engine Laboratory
Technion – Israel
www. jet-engine-lab.technion.ac.il

We assumed that the reason is excess air and high air velocities at the primary zone:

swirler air flow rate → decreased

D_{holes} → Increased

N_{holes} → Increased.

New Result

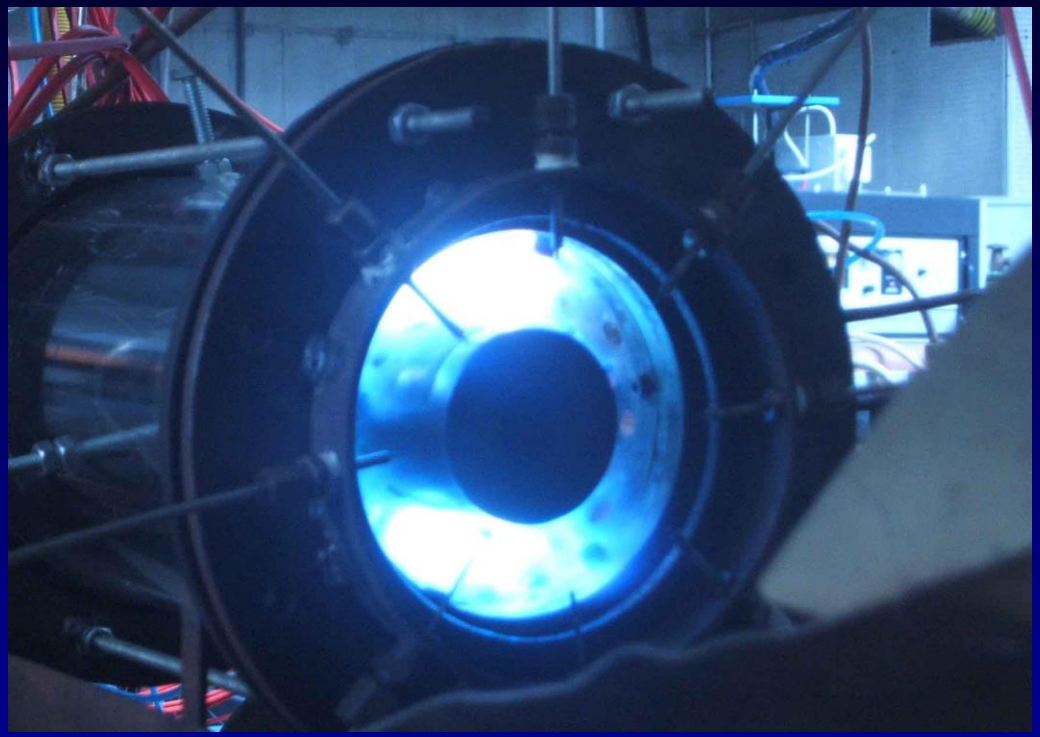

Modified combustor, open exit

Combustion test

Turbo and Jet Engine Laboratory
Technion – Israel
www. jet-engine-lab.technion.ac.il

Test ignition and combustion

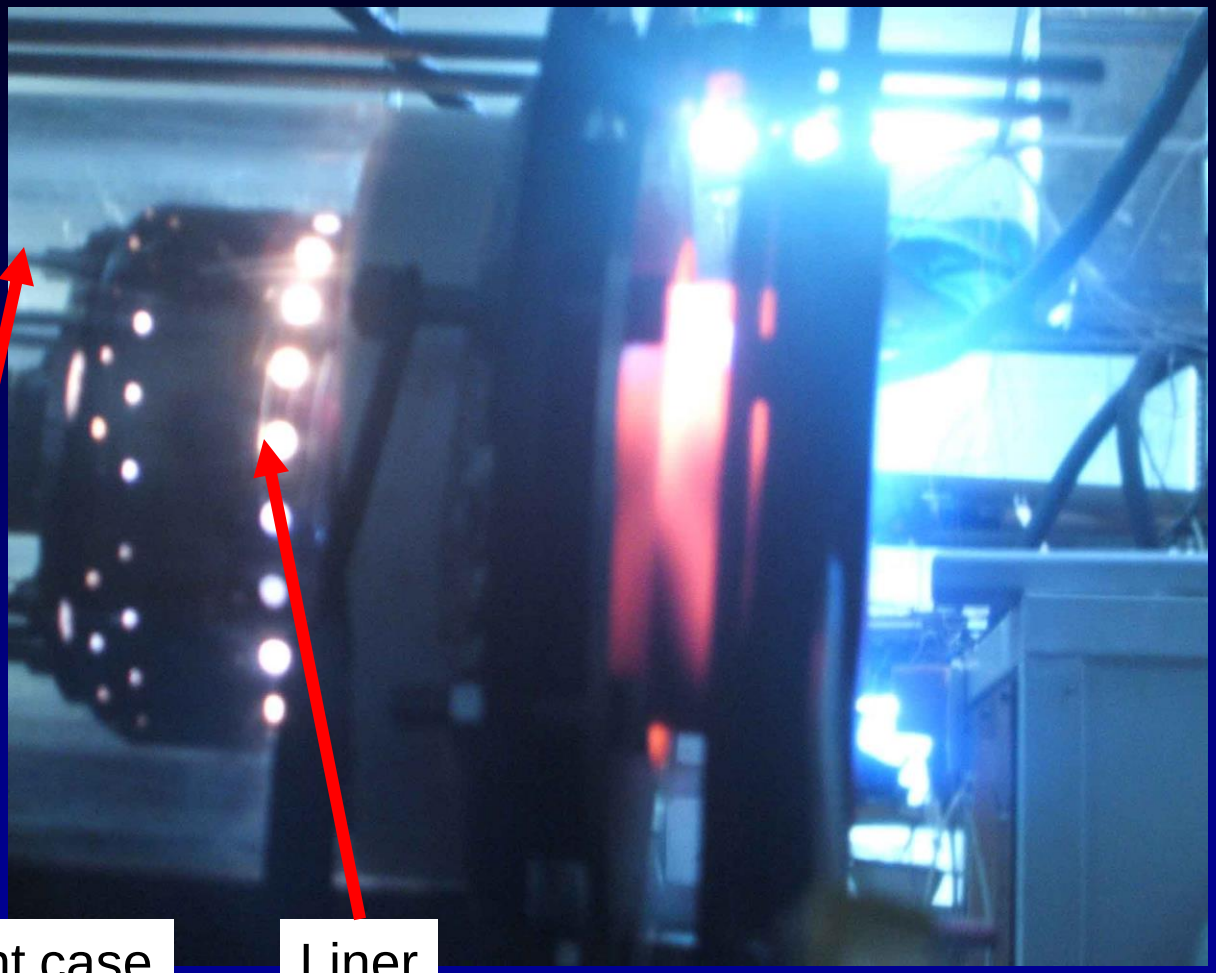

Transparent case

Liner

Test with open exit of the combustor

Turbo and Jet Engine Laboratory
Technion – Israel
www. jet-engine-lab.technion.ac.il

Tests demonstrated stable combustion over a wide range of fuel and air flow rates

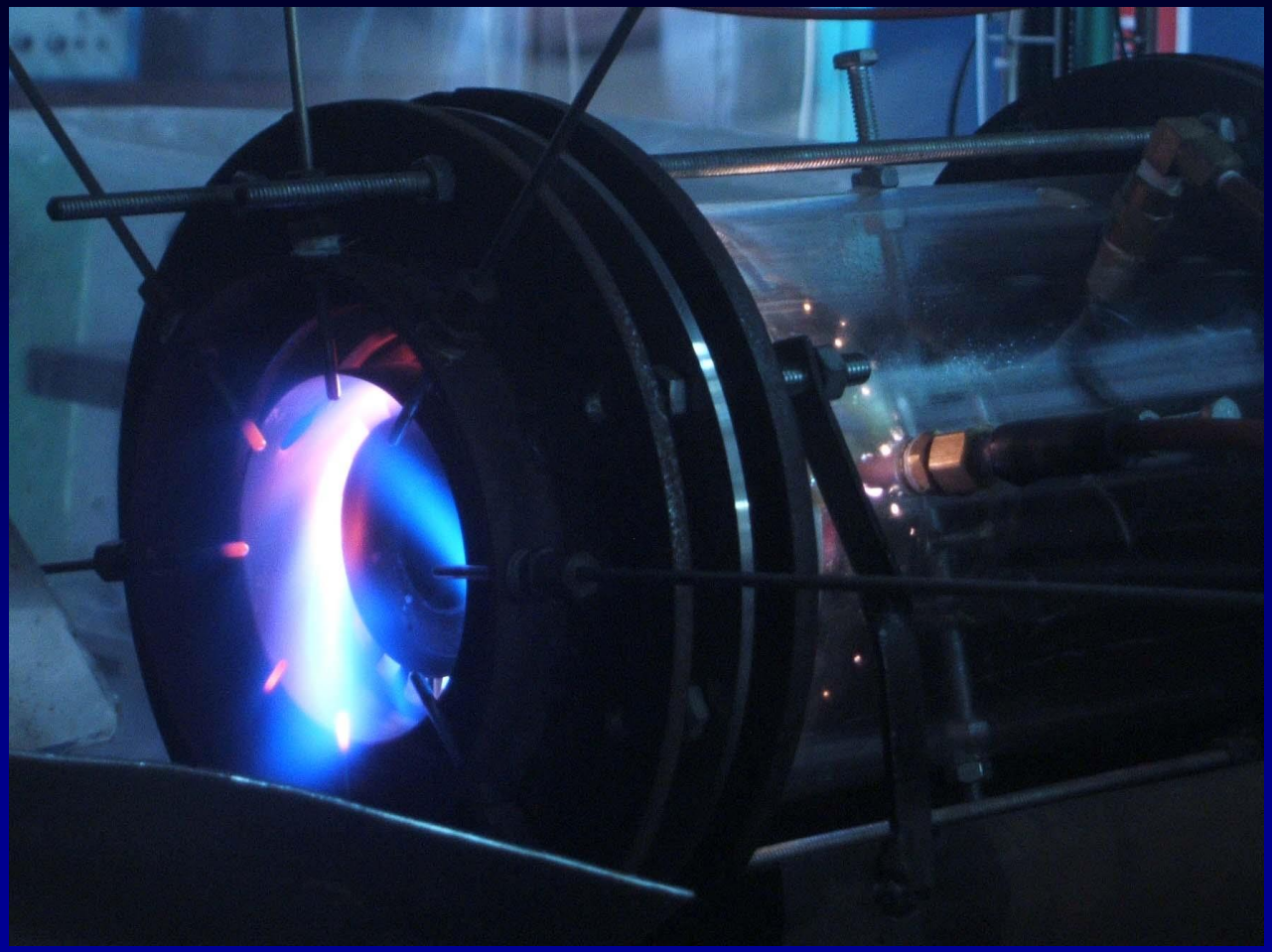

Test with turbine vanes at the exit

Turbo and Jet Engine Laboratory
Technion – Israel
www. jet-engine-lab.technion.ac.il

Ignition process, turbine stator is installed

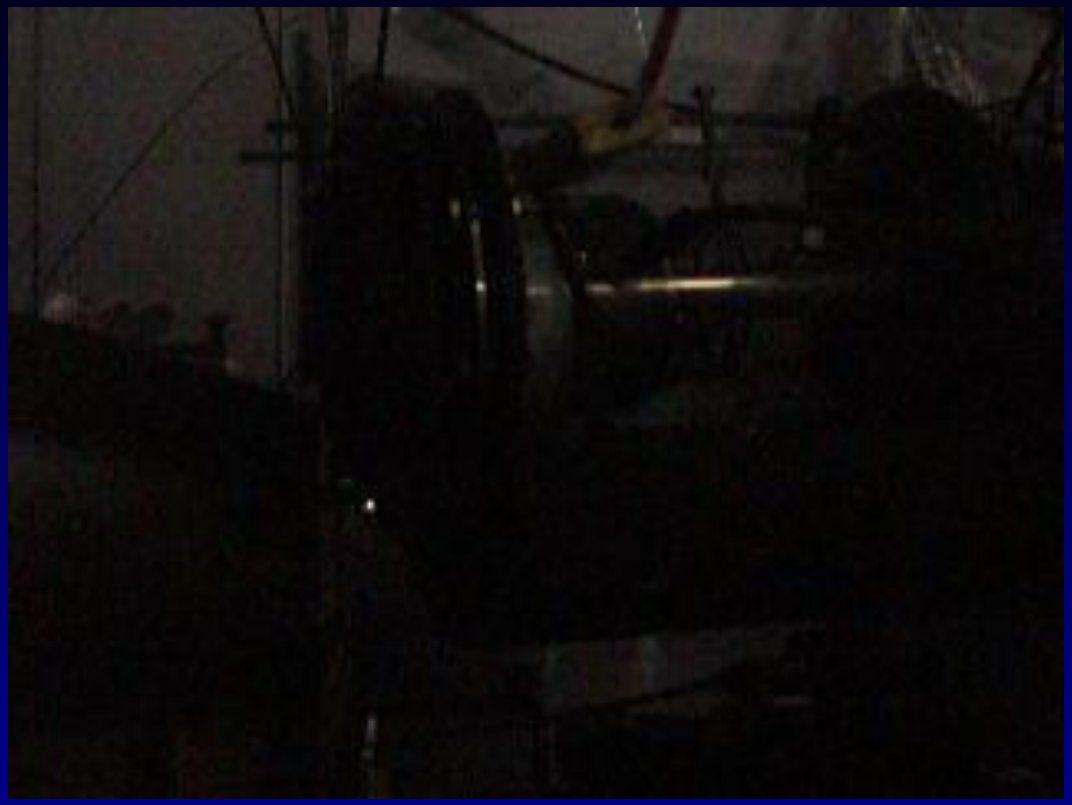

successful Ignition was achieved for the following parameters:
Ta = 298 K, P=1 bar m_a (max) = 0.147 kg/s m_f = 0.0032 – 0.0063 kg/s
(f = 0.022-0.043)

Turbo and Jet Engine Laboratory
Technion – Israel
www. jet-engine-lab.technion.ac.il

COMBUSTION TESTS

Test Conditions::

Ambient temperature = 298 K
Combustion pressure = 1bar
Supply pressure = 1.1 bar
Air flow rate (max) = 0.180 kg/s
Fuel flow rate = 3.2 –6.3 gr/s
(f = 0.018-0.035)

Combustion, open exit

Turbo and Jet Engine Laboratory
Technion – Israel
www. jet-engine-lab.technion.ac.il

CONCLUSIONS

☻ Fuel system for small combustor with 6 air-blast atomizers was developed.

1. Air-blast atomizer: the collapse of Liquid bubble generates wide angle and fine spray at low pressures

- Fine spray (SMD of 30-50 microns) is feasible even at low liquid pressure (<1 bar) and low air velocity (<30 m/s).

Turbo and Jet Engine Laboratory
Technion – Israel
www. jet-engine-lab.technion.ac.il

CONCLUSION (cont.)

2. ATOMIZATION AND COMBUSTION STUDY BY CFD.

As CFD simulations cannot take into account evolution of liquid bubble and its collapse.

Yet, only qualitative agreement was found between simulations and experiment.

3. TEST-RIG AND COMBUSTION TESTS:

The liner of “OLYMPUS” combustor with transparent casing was used as prototype.

Modification in the combustor included variations in the swirlers and holes of the primary zone.

The modified combustor was successfully tested and spark ignition within wide range of air and fuel flow rates was achieved.

Turbo and Jet Engine Laboratory
Technion – Israel
www. jet-engine-lab.technion.ac.il