R-Jet Engineering

Appreciates the opportunity to present

to the

Third Conference on Turbojets and Gas Turbines

the

OCN Turbo-Prop

TP 8.8 Engine Family

November 2003

OCN T.P. 8.8 Family - Presentation Content

1. Small Conventional Gas Turbines
   Performance evaluation
2. The OCN Engine
   Thermodynamic Cycle (T-S Diagram)
   OCN Cycle Advantages
3. Small OCN performance – near and long term
4. Small OCN Turbo Prop (8.8) Family
   Compressor Flow Path
   Rotating Combustion Chamber
   CFD Results
   Reaction Turbine Analysis
   Turbine Cooling Method
5. OCN T.P. 8.8
   Flight envelope Performance
   Part Load / Off Design Performance
   Performance Sensitivity Analysis
6. Development program
7. Derivatives

.

OCN TP 8.8 - PUSHER - PULLER

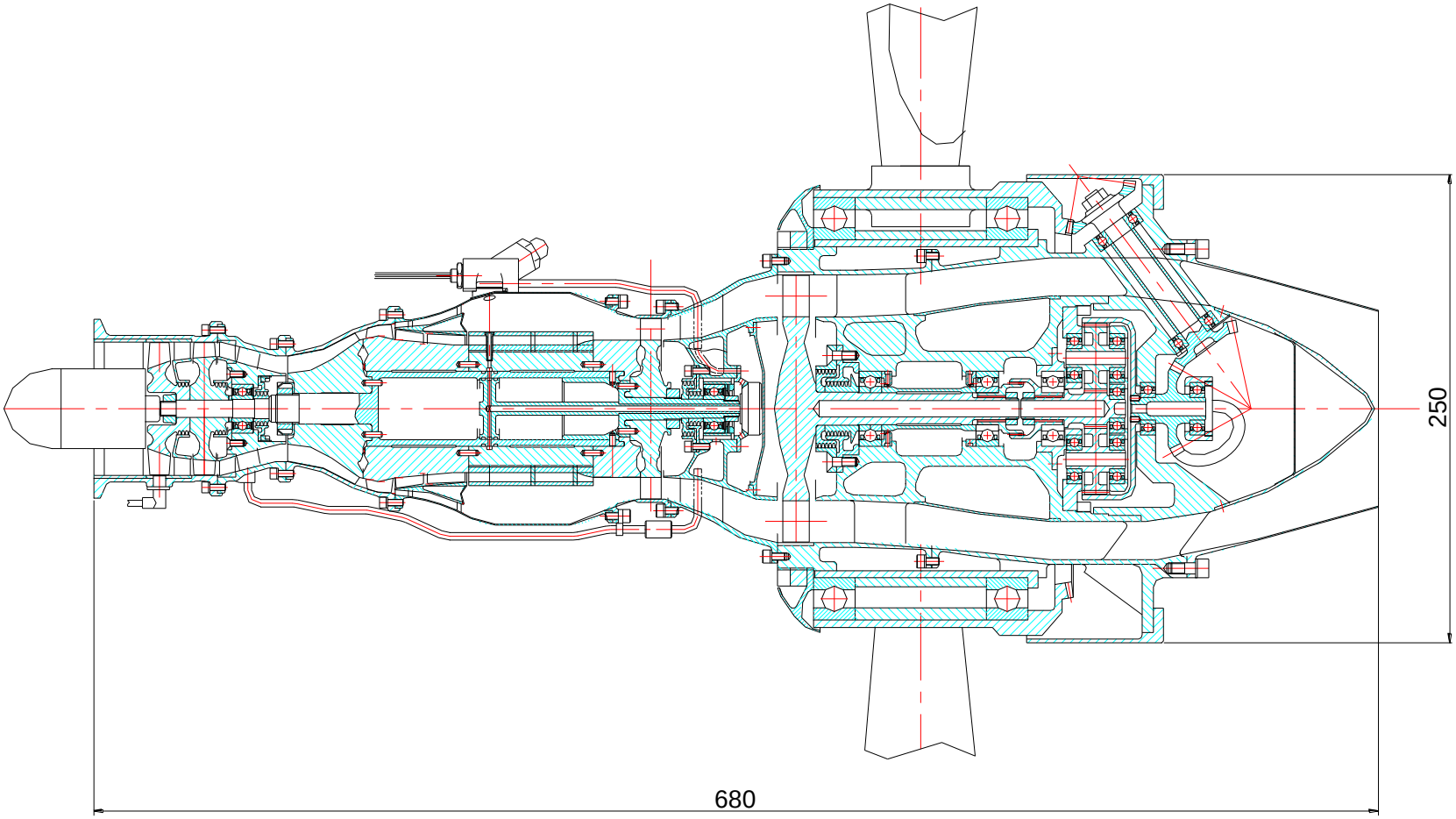

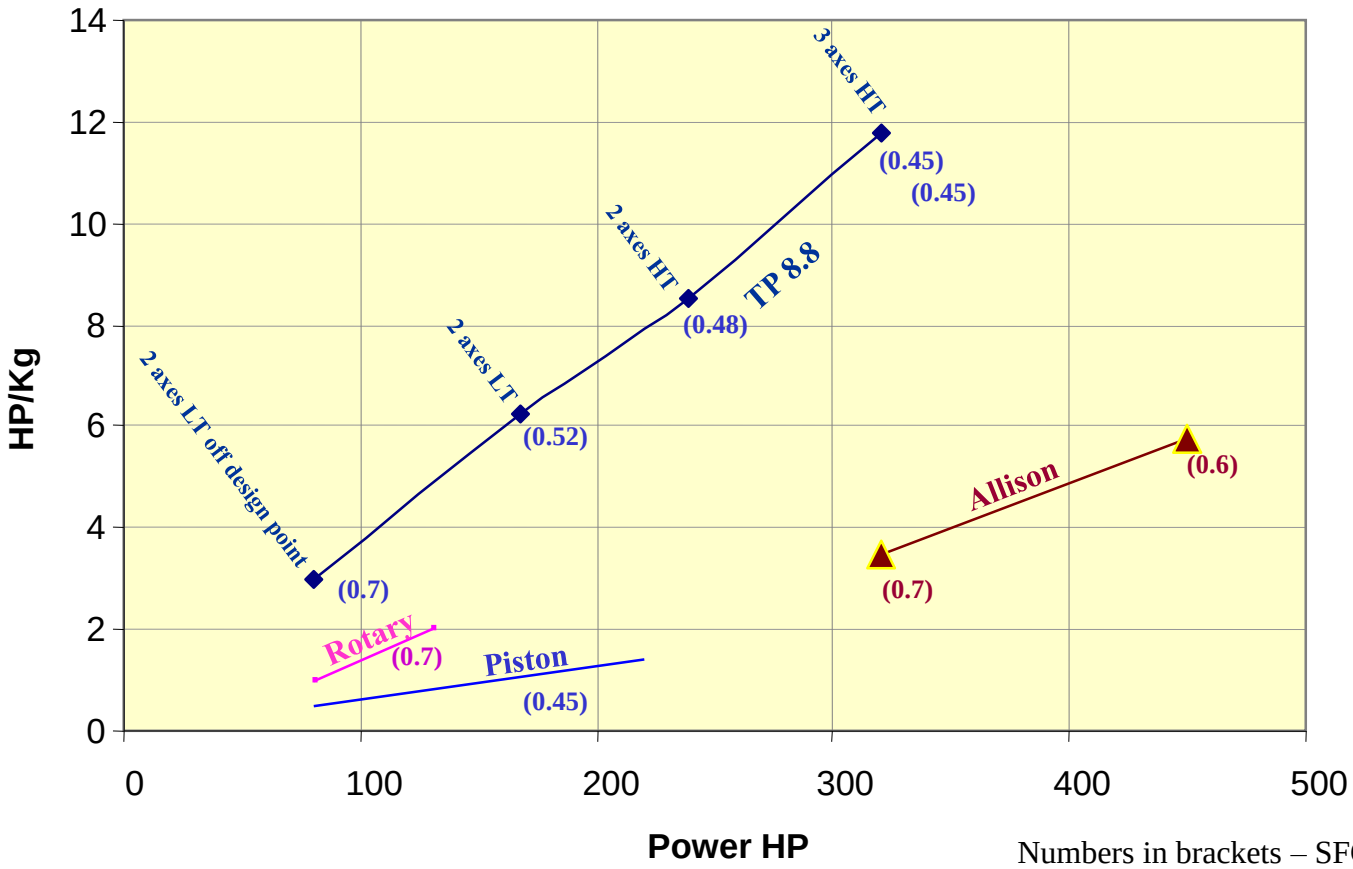

Numbers in brackets – SFC in lb/HP.hr

OCN TURBO PROP ENGINE - OCN TP 8.8
(for illustration - Low Temperature Cycle)

Design Parameters: n_1=110,000 rpm; n_2=75,000 rpm; G=0.6 Kg/sec; Compressor P.R.=8.8; T_{inlet}=1273°K.

- **Weight - 27 kg (with gear);**

- **Performance at SLS conditions:**

Net Power	**= 120 KW;**
Thermal Efficiency	**= 27%;**
SFC	**= 0.515 lb/hp/hr.**

Small Conventional Gas Turbine Performance

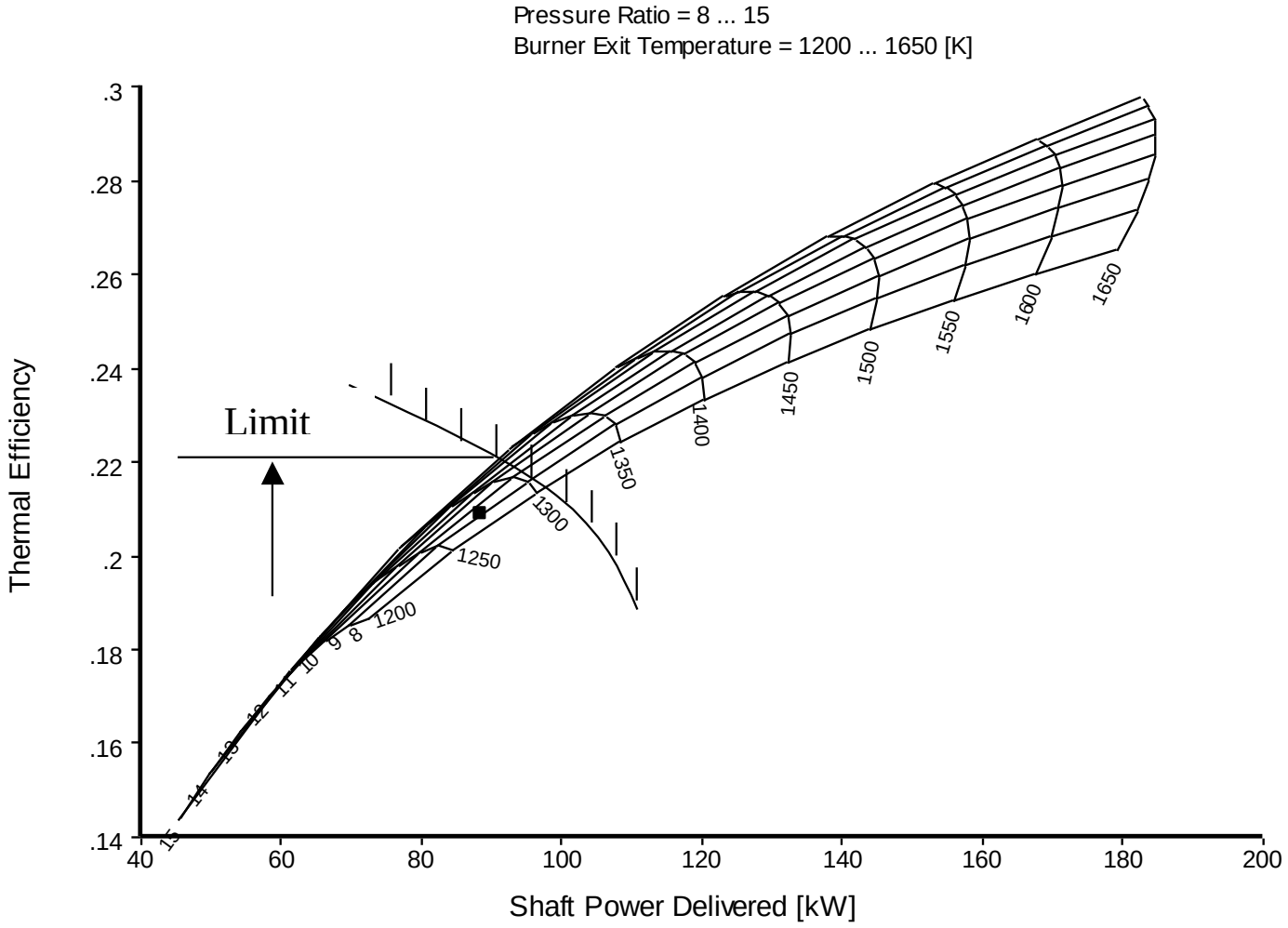

Small OCN Gas Turbine (Turbo-Prop.) Performance

Growth Potential (Same Core)

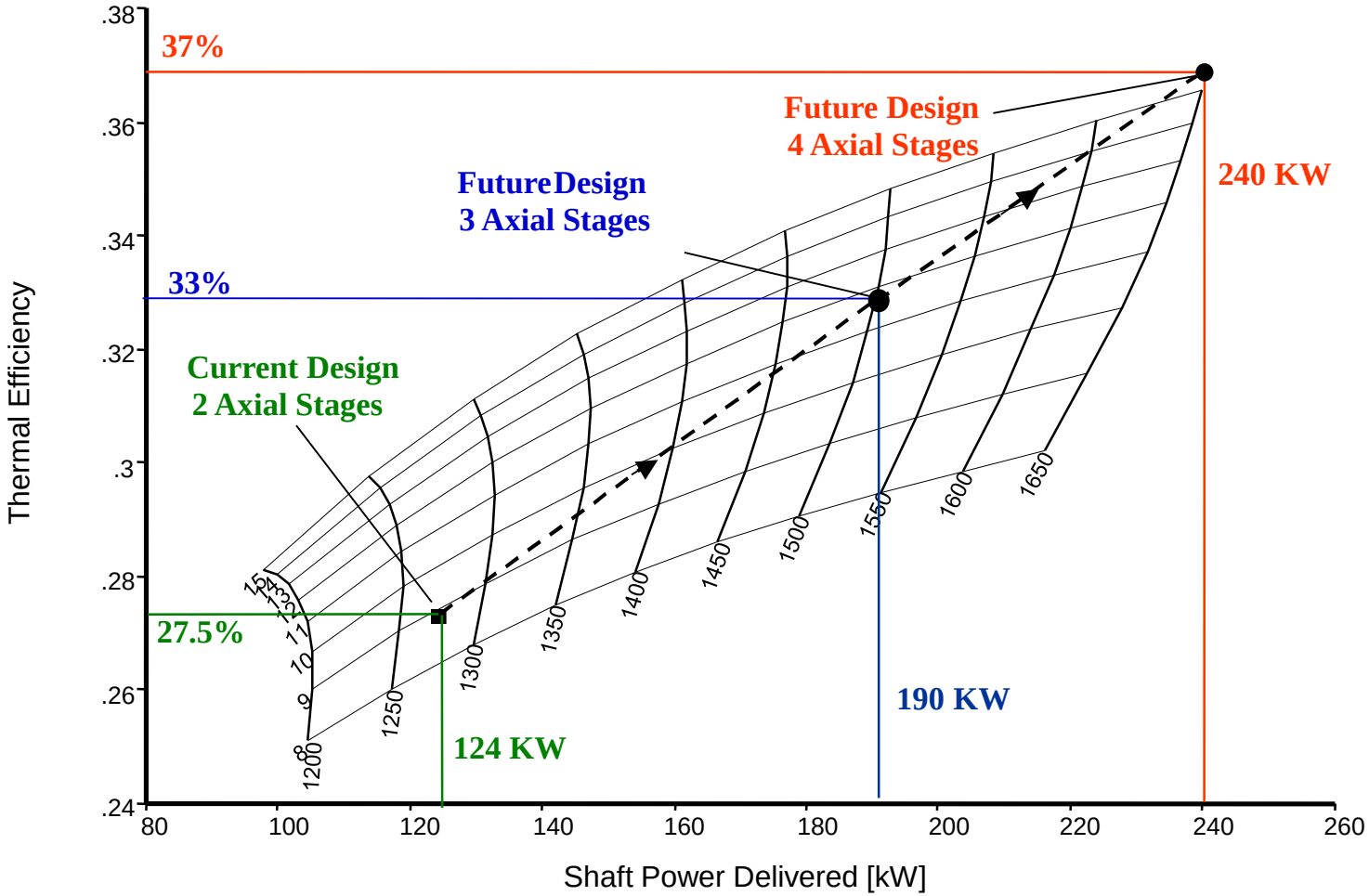

Introduction (cont.)

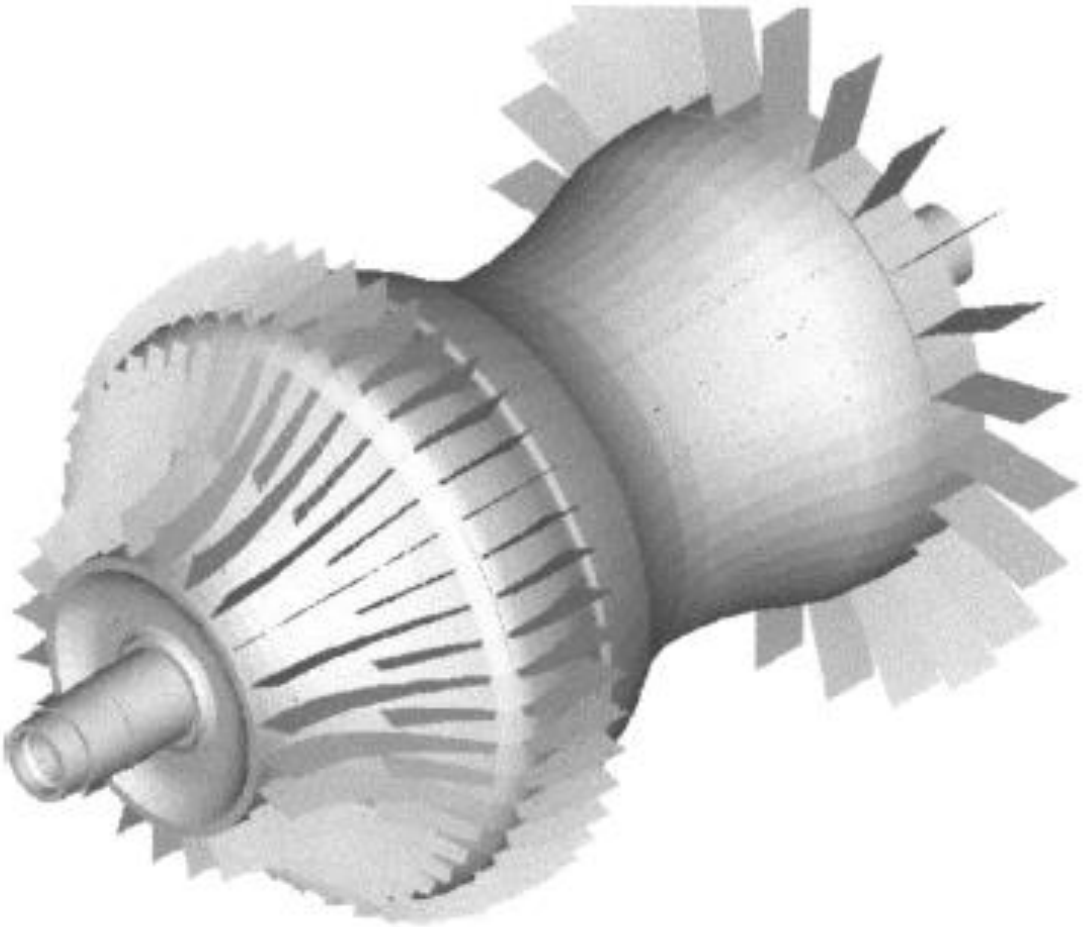

Fig.1 General view rotor model first stage

OCN – Combustor Chamber Design

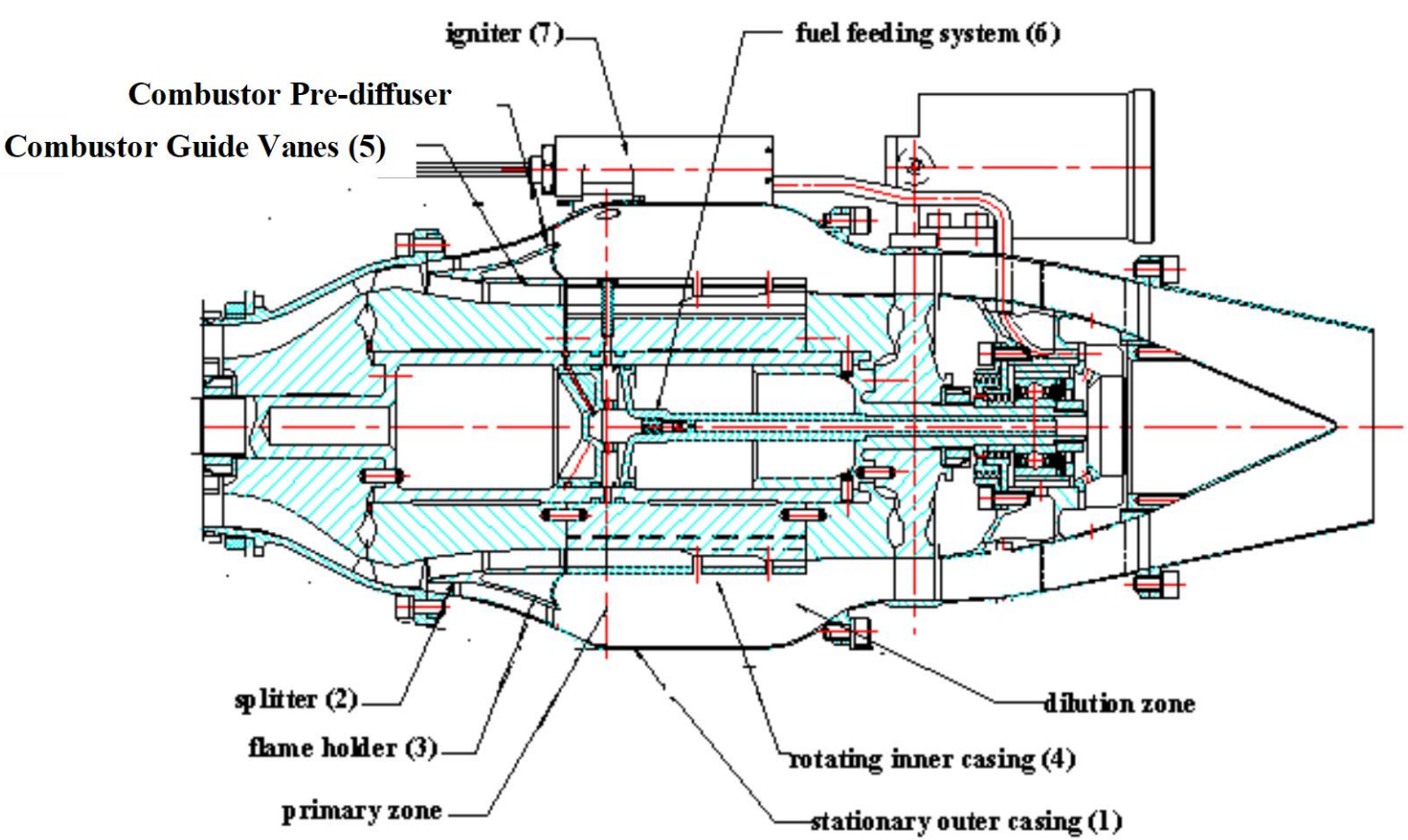

The OCN Thermodynamic Cycle

OCN T-S diagram

Carnot: 1-2-3-4
Conventional : 1-2_c-3_c-4_c
OCN: 1-2_o-3_o-4_o

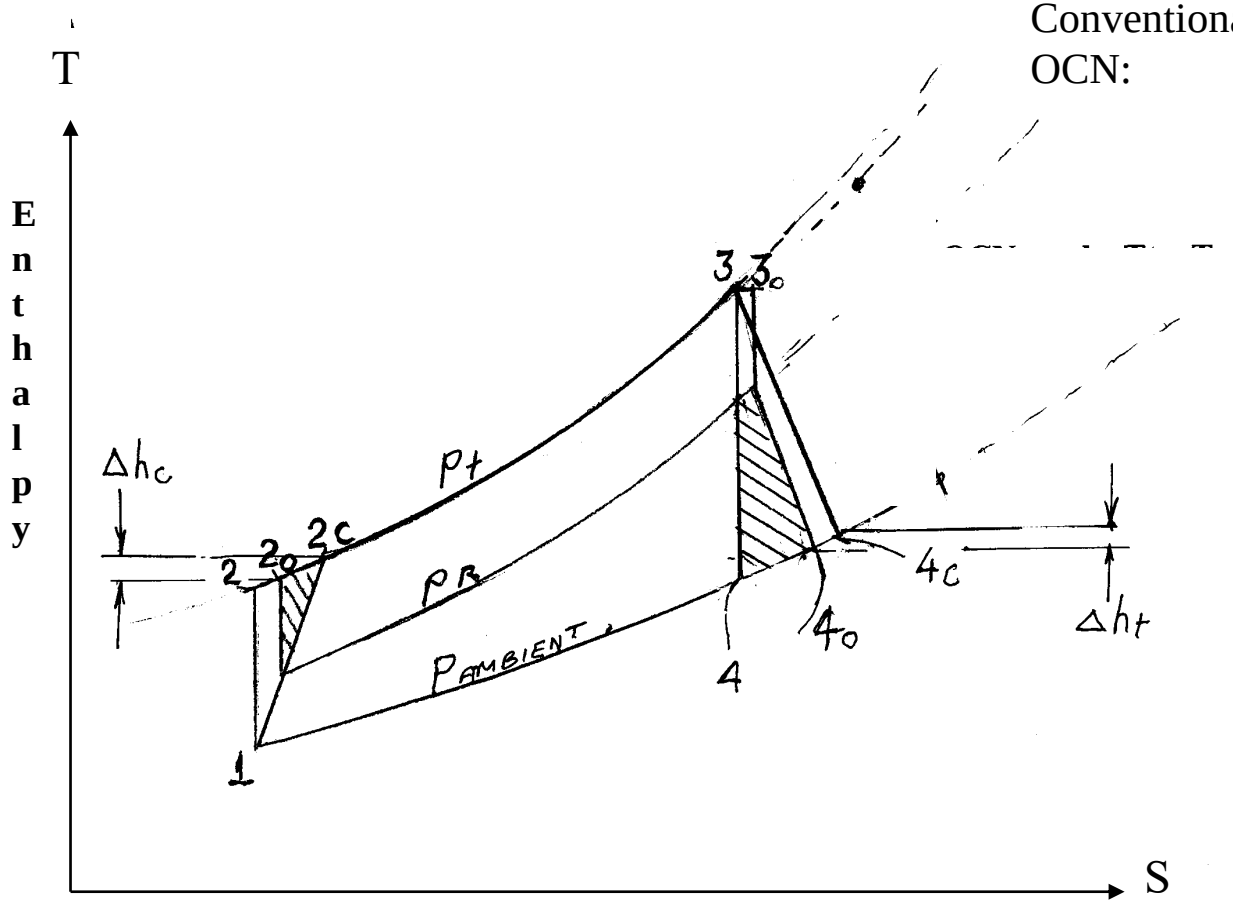

Compressor Flow Path Scheme

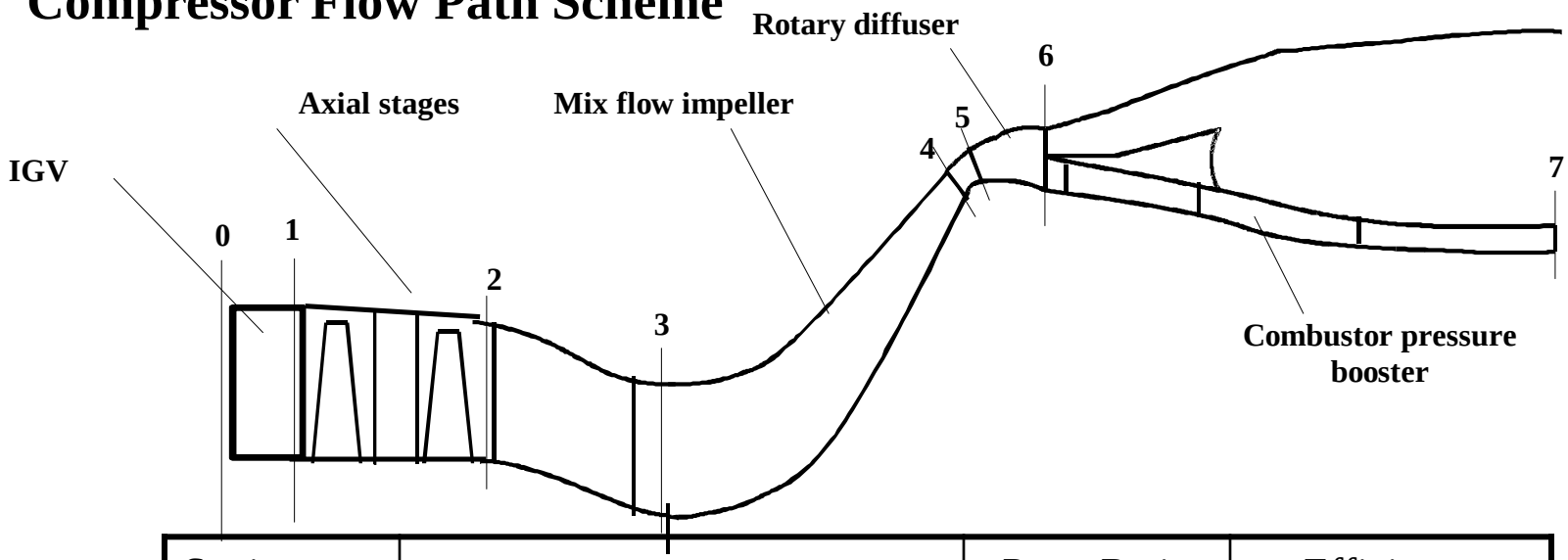

Station		Press.Ratio	Efficiency
1-2	Axial Comp Stage 1 Stage 2	 1.64 1.50	 0.85 0.845
2-4	Mixed Flow Compressor	3.08	0.87
4-6	Rotary Diffuser	1.10	0.72
6-7	Combustor Booster	1.06	0.8
1-7	**Grand Total**	**8.83**	**0.8**

OCN – Inner Casing Design

A-B – Air film Cooling holes
C-D – Dilution Holes
E- Nozzle Air Cooling Jet

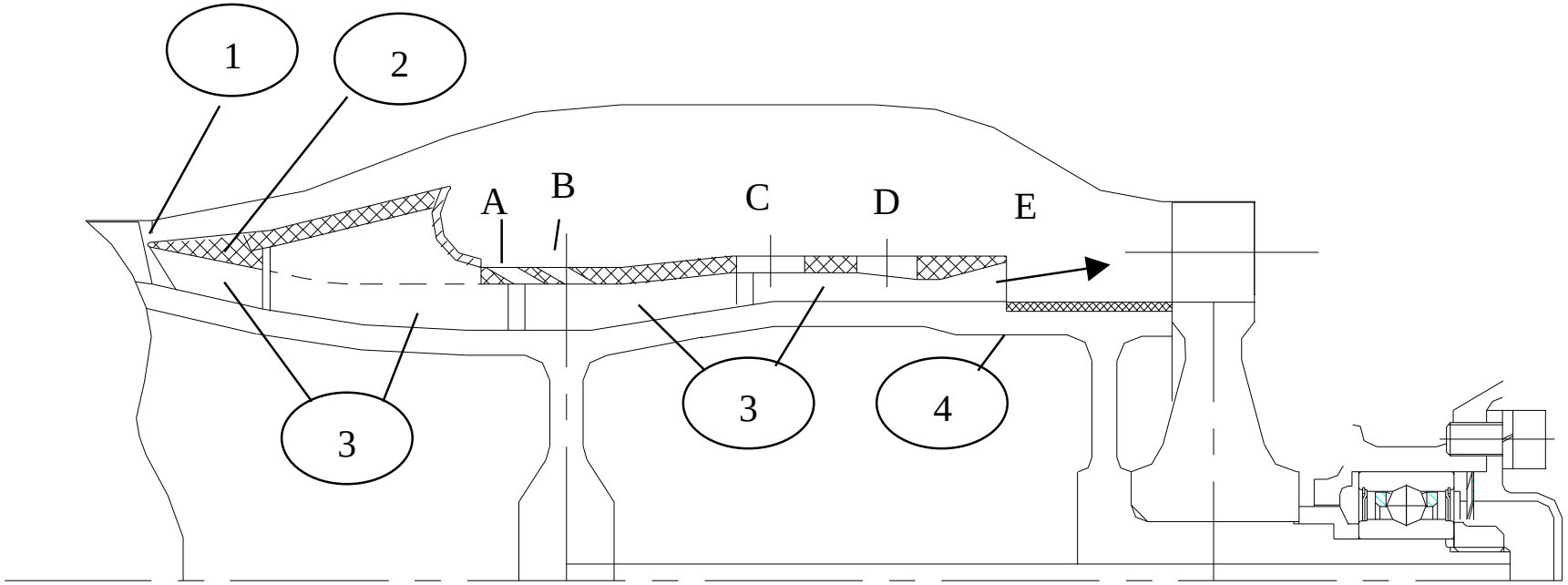

OCN – Combustion Chamber - Section

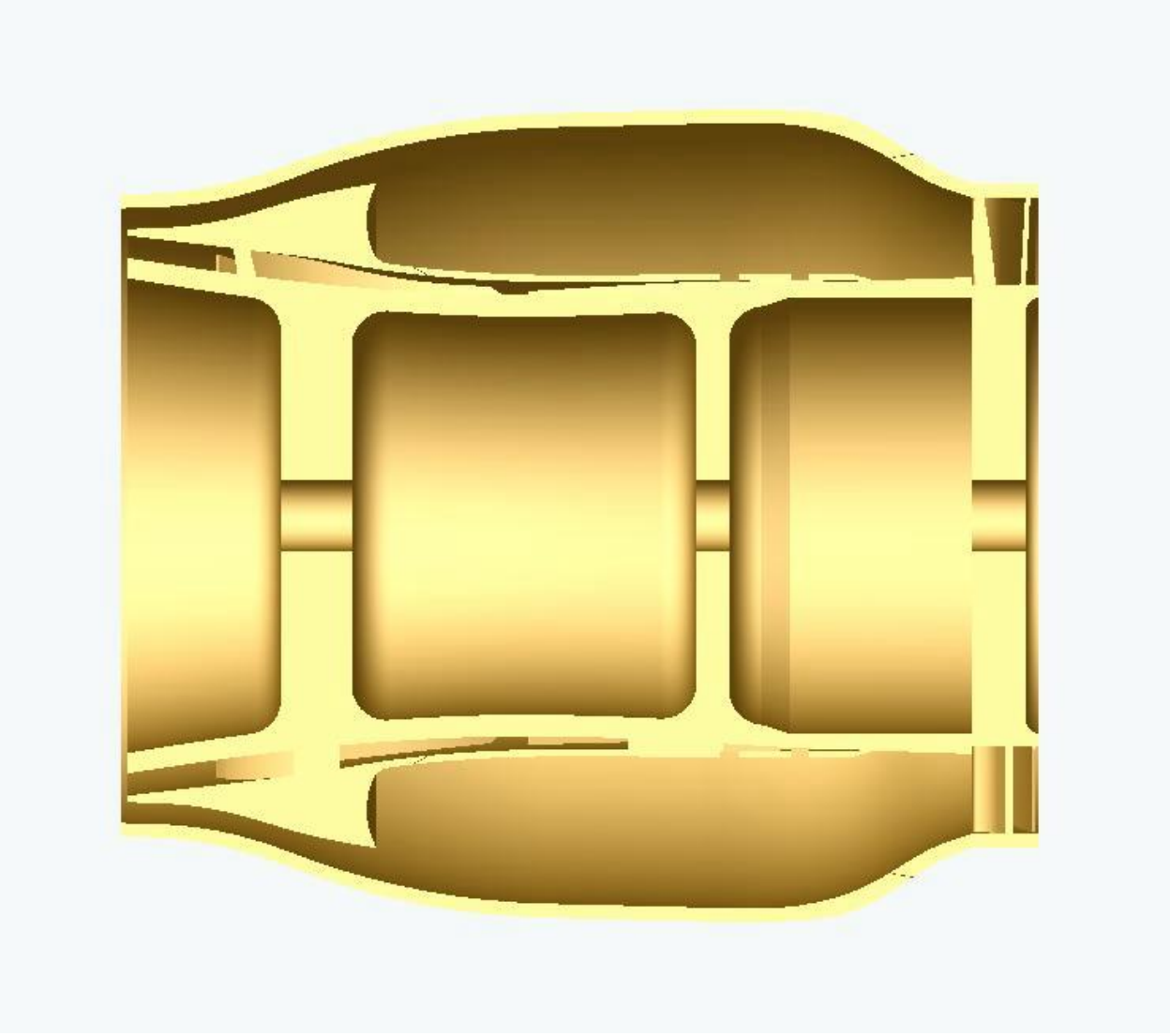

OCN Combustion Chamber - 3D

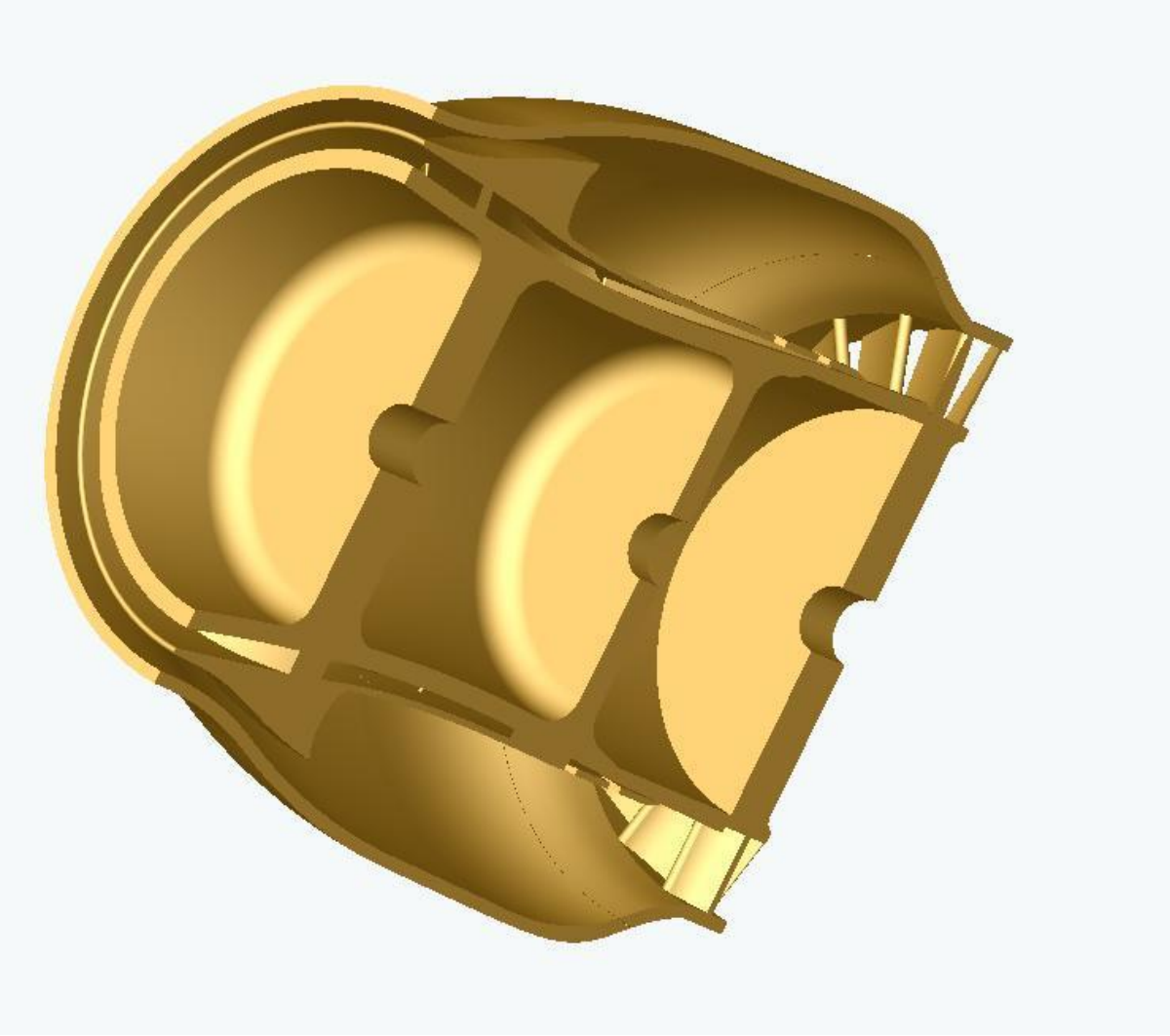

Fig. 13 – Static Pressure Map

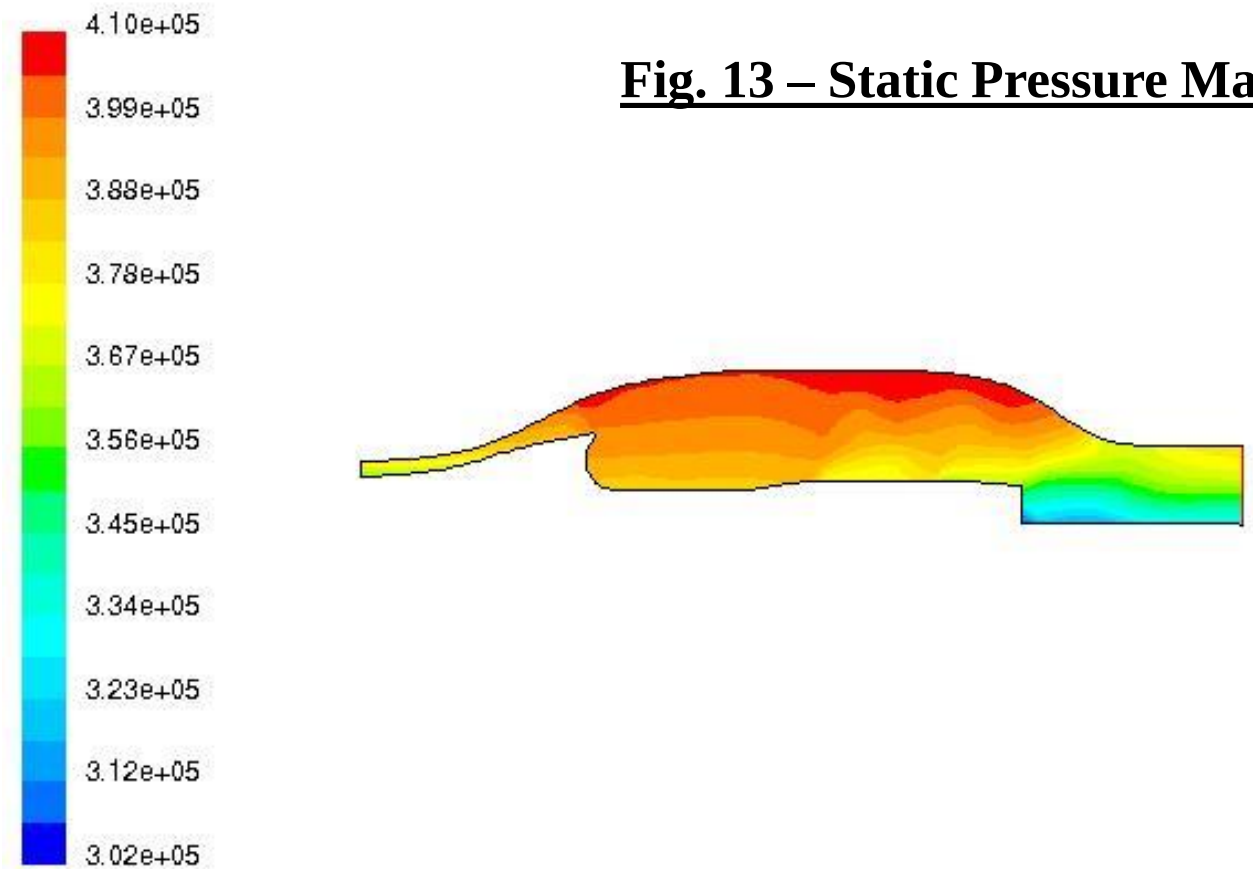

Contours of Static Pressure (pascal)

Jul 13, 2003
FLUENT 6.0 (axi, swirl, dp, segregated, spe5, rngke)

Fig. 14 – Total Pressure Map

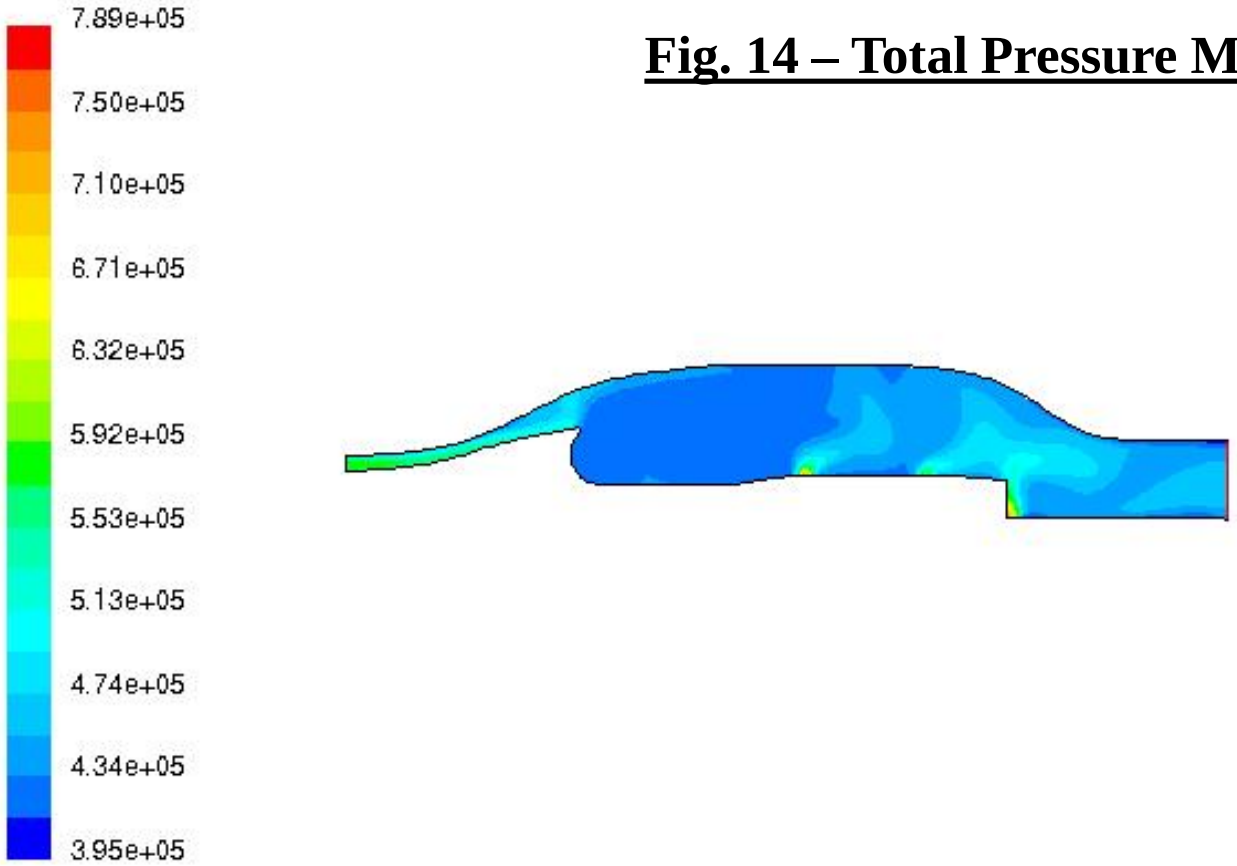

Contours of Total Pressure (pascal)

Jul 13, 2003
FLUENT 6.0 (axi, swirl, dp, segregated, spe5, rngke)

Fig. 16 – Total Temperature Map

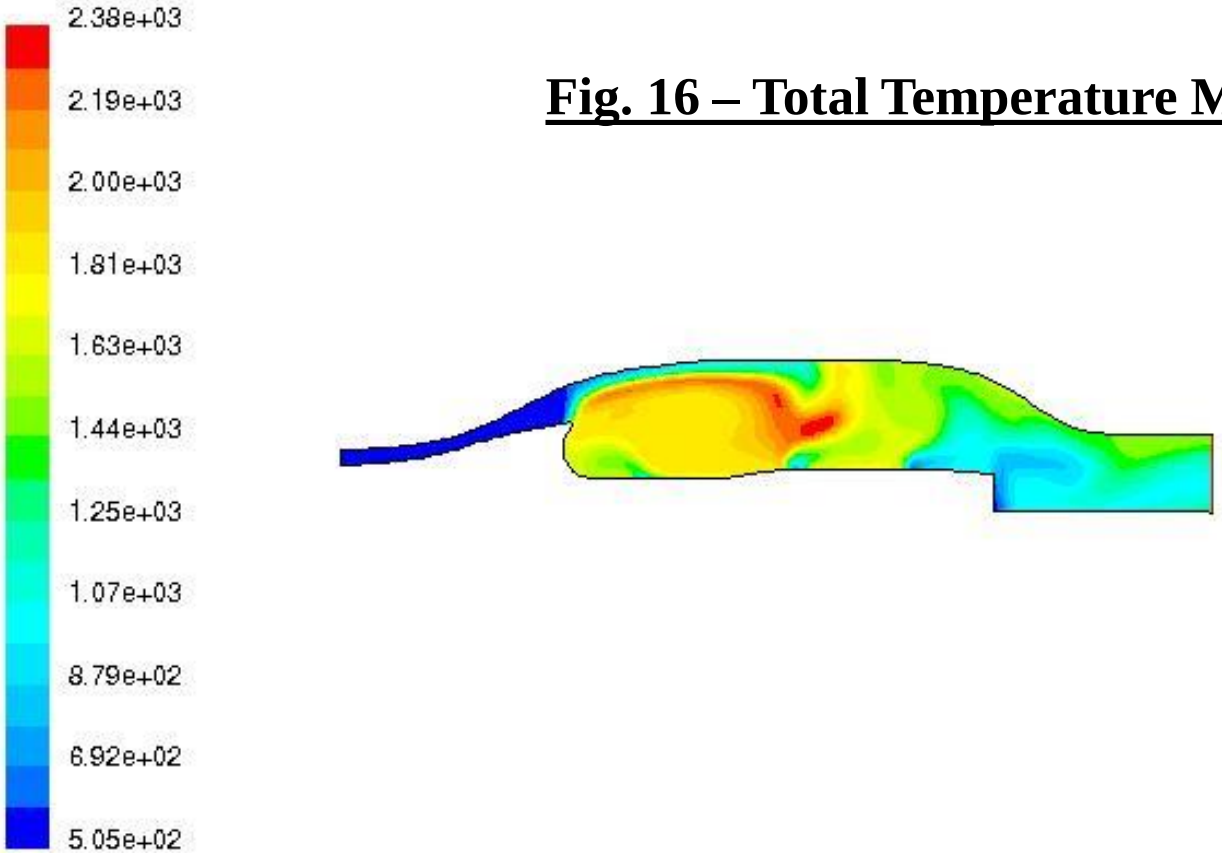

Contours of Total Temperature (k)

Jul 13, 2003
FLUENT 6.0 (axi, swirl, dp, segregated, spe5, rngke)

Fig. 17 – Axial Velocity Map

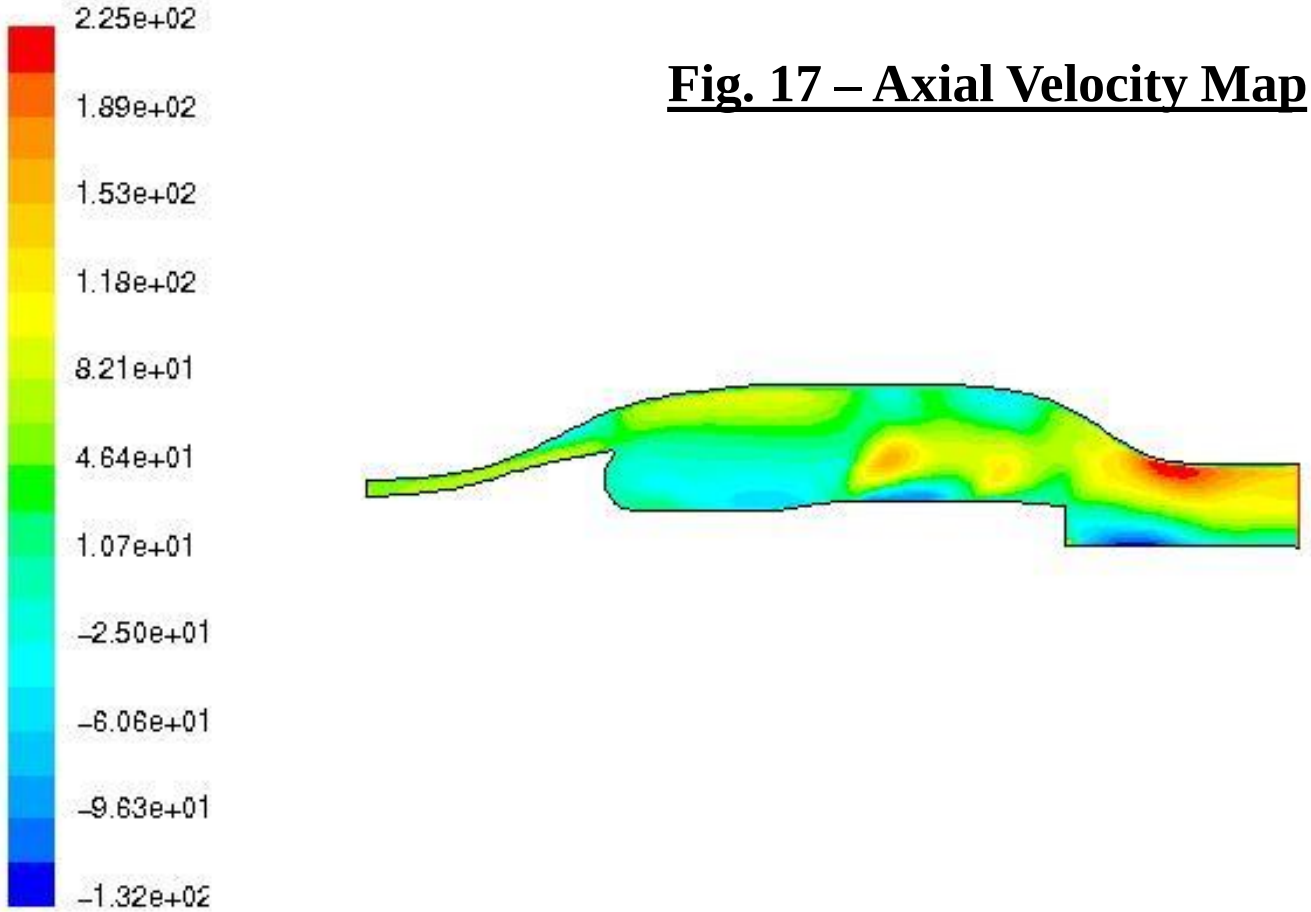

Contours of Axial Velocity (m/s)

Jul 13, 2003
FLUENT 6.0 (axi, swirl, dp, segregated, spe5, rngke)

Fig. 18 – Tangential Velocity Map

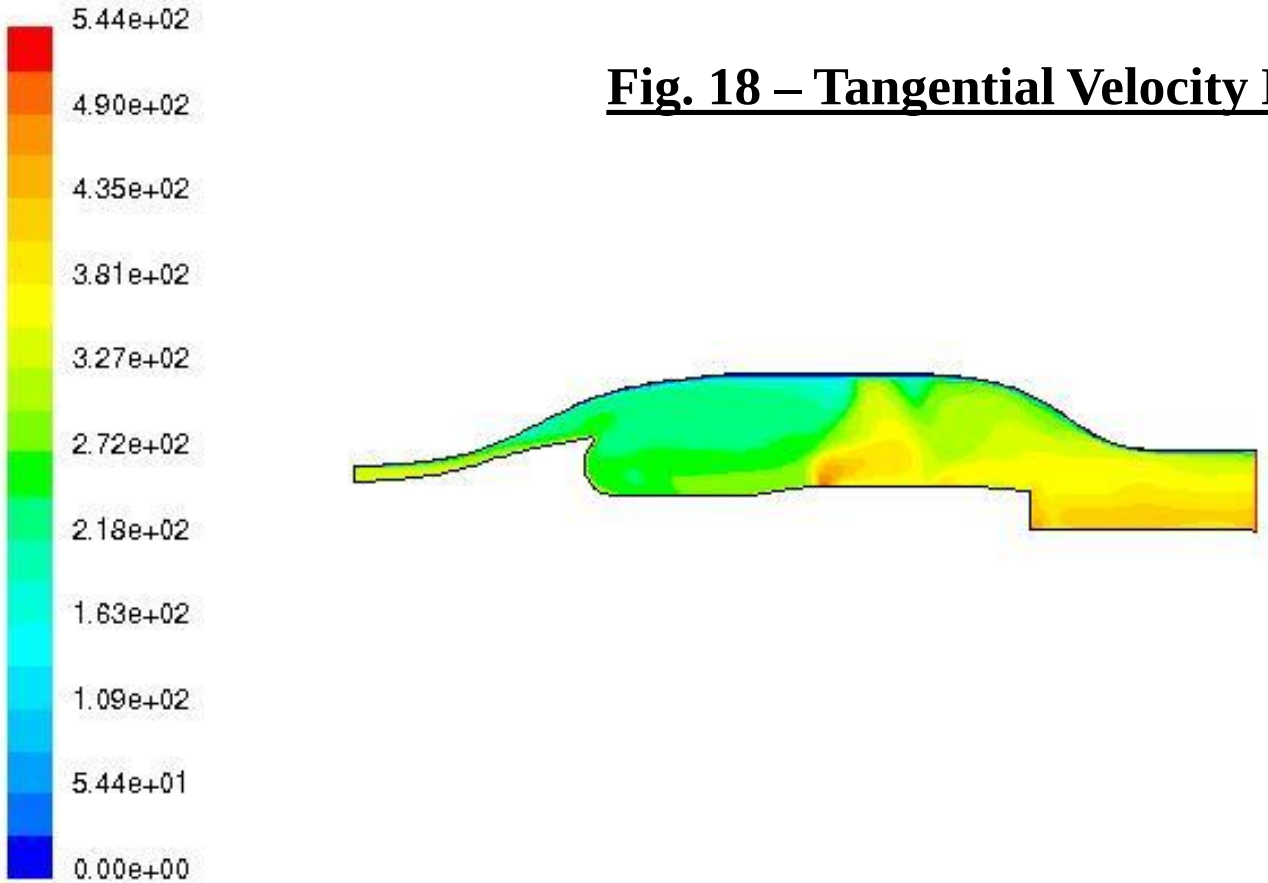

Contours of Swirl Velocity (m/s)

Jul 13, 2003
FLUENT 6.0 (axi, swirl, dp, segregated, spe5, rngke)

Fig. 20 – Fuel Concentration Map

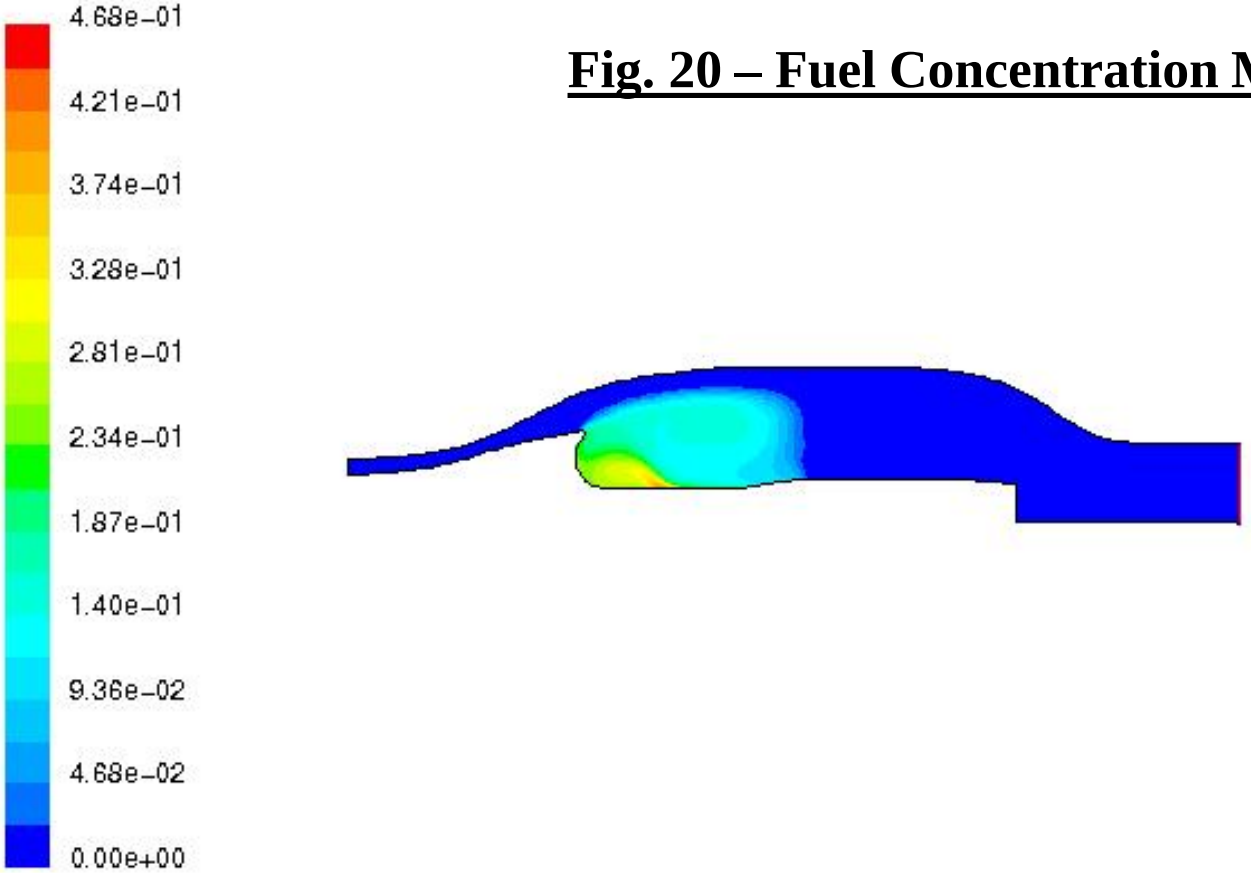

Contours of Mass fraction of c12h23

Jul 13, 2003
FLUENT 6.0 (axi, swirl, dp, segregated, spe5, rngke)

OCN Turbine Blade Shape

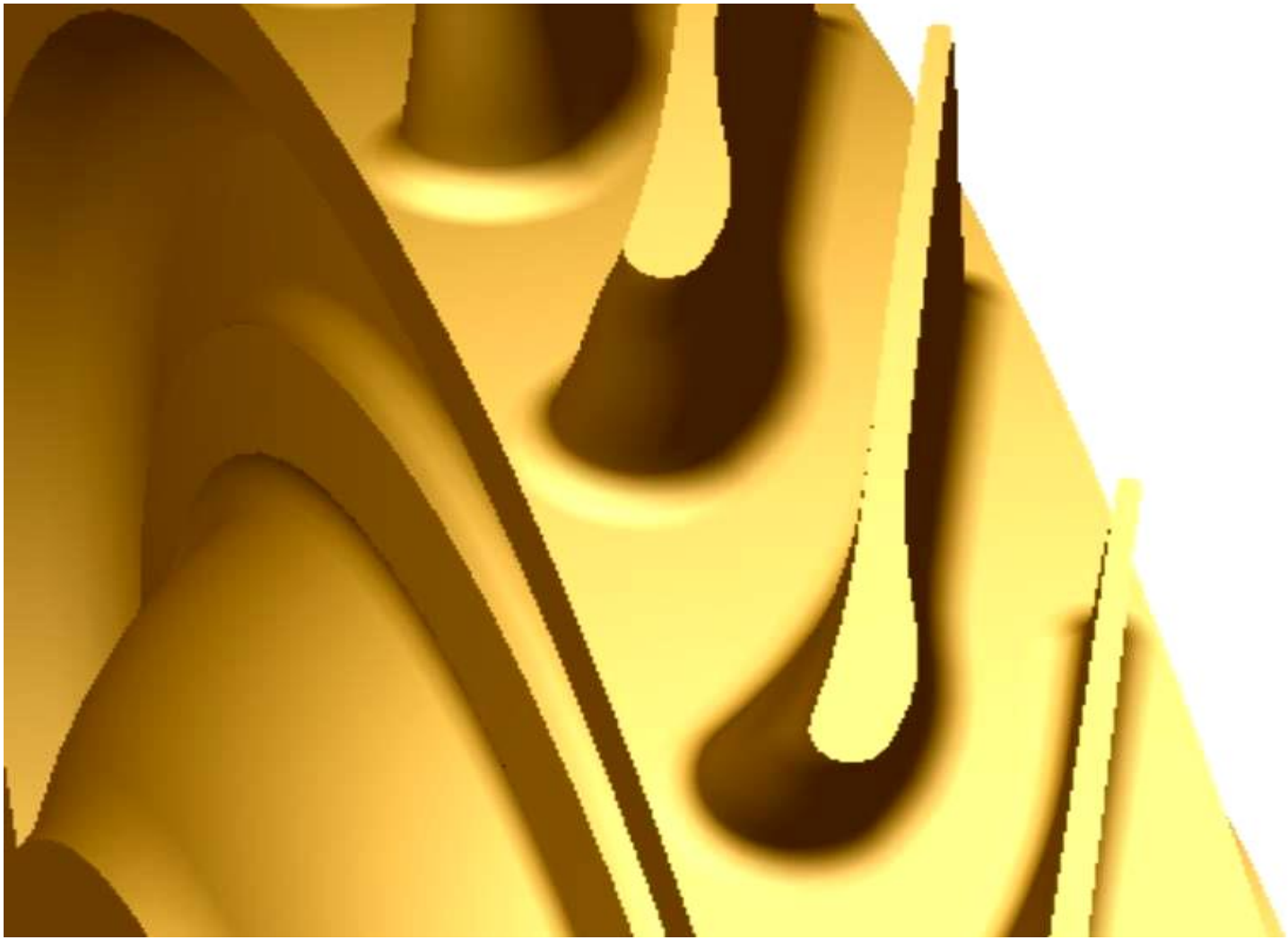

Aspect Ratio And Blade Deflection Angle effect on Secondarv Lossess

The table below details the input data to find the losses for the OCN turbine vs. the conventional turbine, both turbines have the same inlet conditions and same power rating.
The losses of in the conventional turbine are two times higher—this is the main explanation of the higher efficiency.

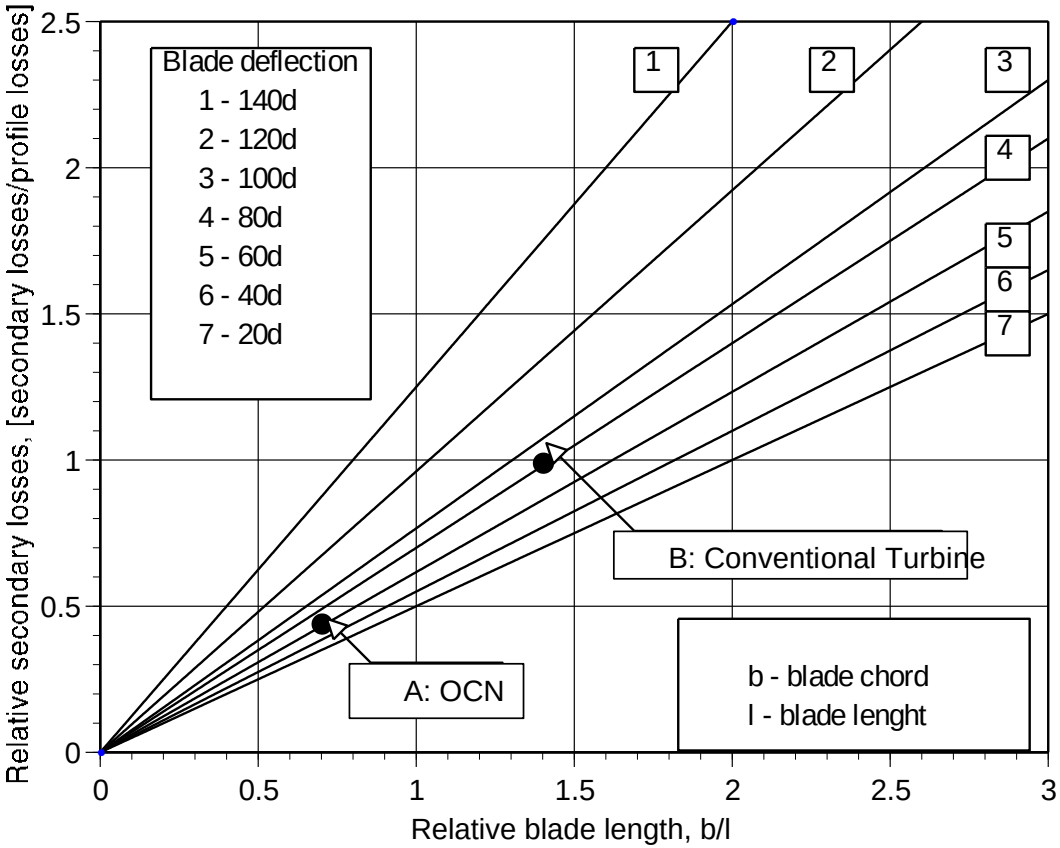

Relative secondary losses - relative blade length, blade deflection relation for impulse and reaction blades.

OCN – Turbine Blades Cooling Method

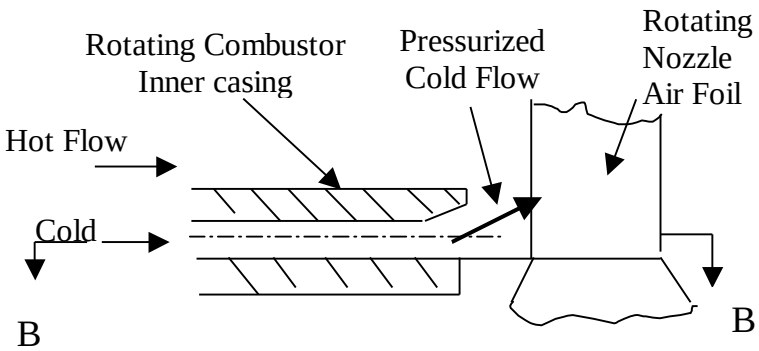

Section A-

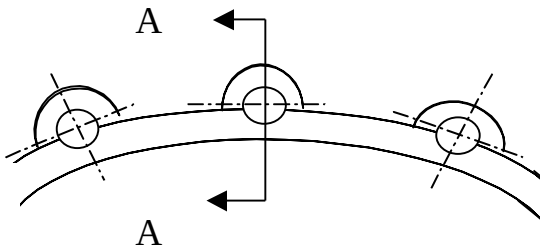

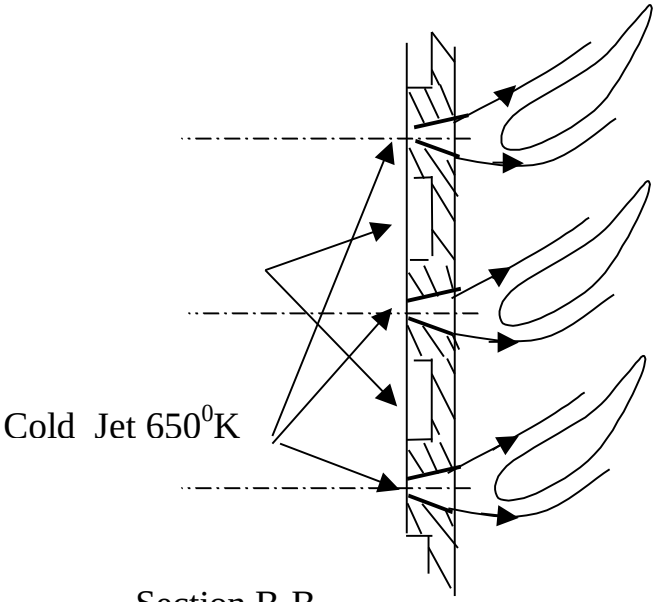

Section B-B

Example:

Cold Flow = 6% ; Hot flow =94%

Inlet Average Temperature=
0.06*650 + 0.94*1,640 = 1,580^{0}K

Metal Temperature < 1,000^{0}K

OCN TP 8.8 Part Load Performance
H = 5000m, M = 0.15

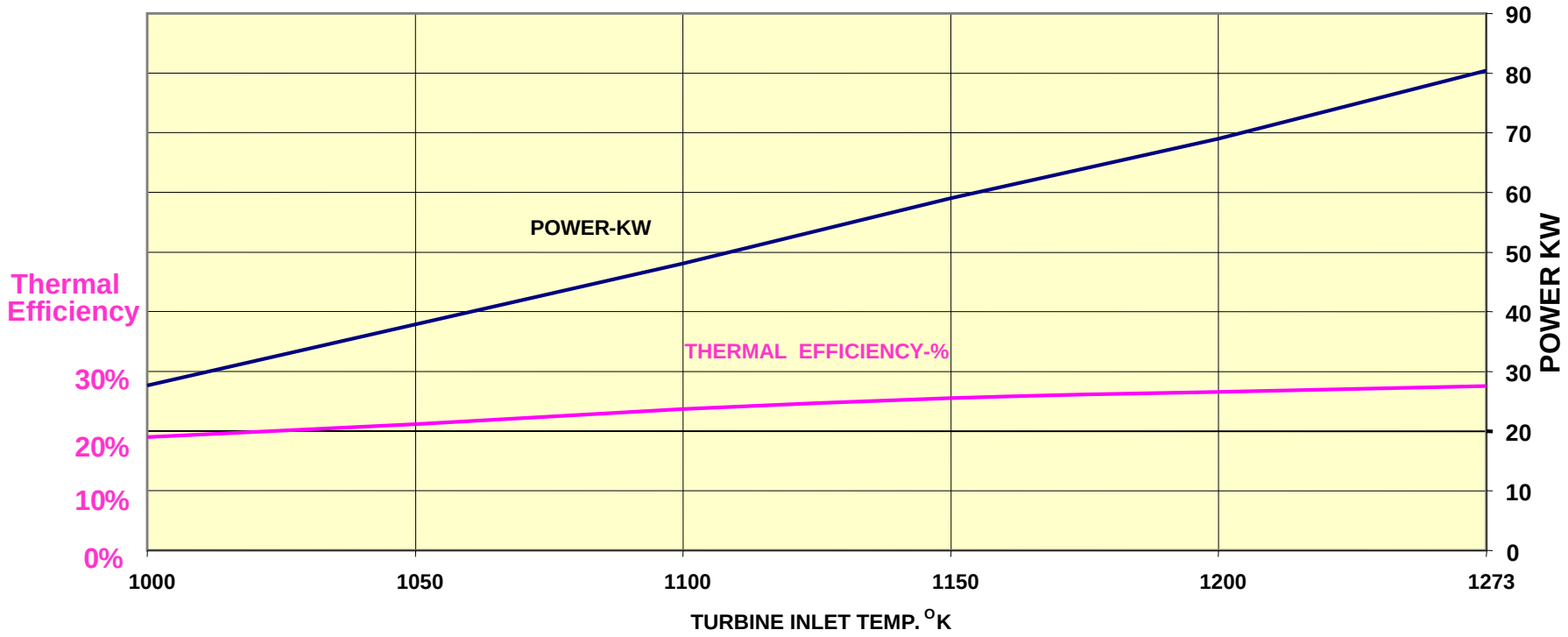

OCN TP 8.8 – Derivative
OCN – Turbo Jet Engine – TJ 8.8

n = 110,000 rpm; G = 0.6 Kg/sec; Compressor P.R. = 8.8; T_{inlet} = 1200°K;

Weight = 5.5 Kg (w/o Alternator); Performance @ SLS Conditions: Thrust = 34 Kg; SFC = 0.96 Kg/Kg/hr.

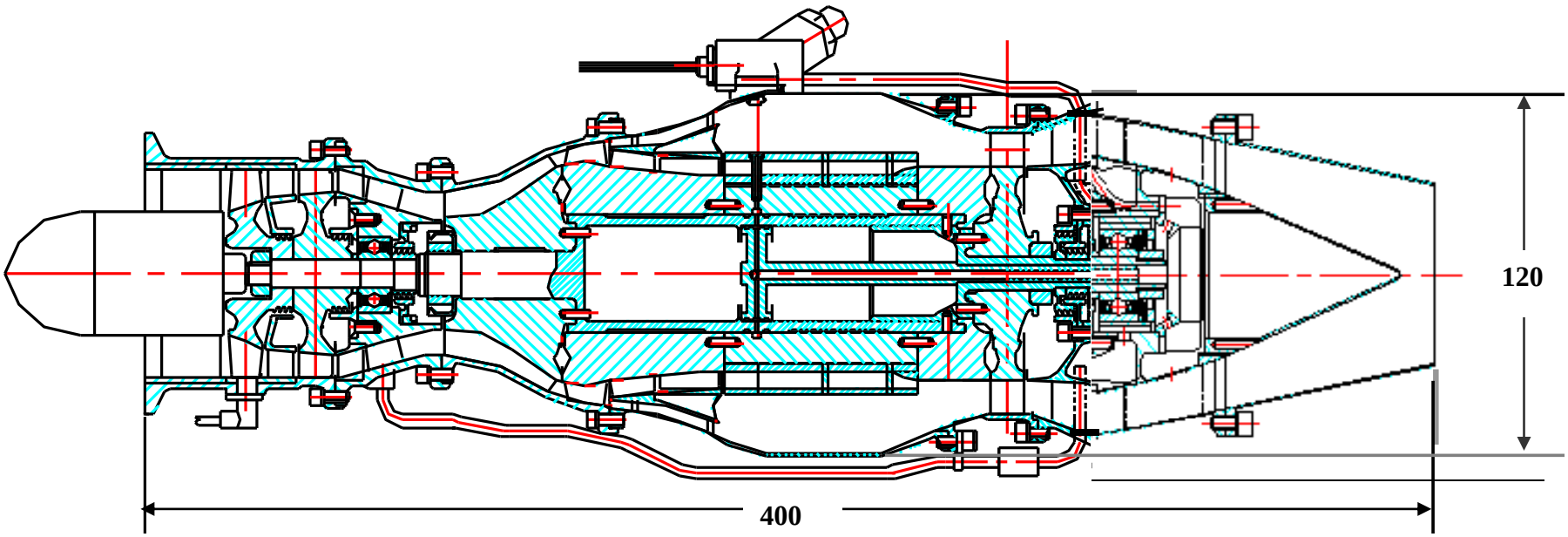

OCN TF 8.8 Family – Aft Fan Derivative

	Parameter		TF 8.8 LT	TF-8.8 HT
1	Turbine Inlet Temperature	^{o}K	1273	1505
2	Core Flow	Kg/sec	0.6	0.6
3	B.P.R.		3.5	4.0
4	H.P. Turbine Speed	rpm	105,000	105,000
5	L.P. Turbine & Fan Speed	rpm	68,000	68,000
6	Length	mm	585	585
7	Diameter	mm	240	240
8	Thrust	Kg	72	100
9	SFC	Kg/Kg.hr	0.63	0.6
10	Weight	Kg	12	13.5