"Flameless Oxidation Combustor Development for a Sequential Combustion Hybrid Turbofan Engine"

Yeshayahou Levy

Technion - ISRAEL

http://jet-engine-lab.technion.ac.il

MY THANKS TO ALL CONTRIBUTORS

- Dr. Valery Sherbaum, Technion
- Dr. Vitali Ovcherenko, Technion
- Dr. Vladimir Erenburg, Technion
- Dr. Igor Geisinski, Technion
- Mr. Alex Roizman, Technion
- Mr. Dan Nahoom
- Dr. Arvind Rao, Delft, The Netherlands
- Prof. Mario Costa, IST, Portugal
- Mr. Bruno Bernasrdes, IST, Portugal
- Mr. David Nascimento, IST, Portugal

Gas Turbine Pollutants

There is a global need to reduce emission and GHG from aircraft. This can be achieved by:

- Drag reduction
- Use of low carbon fuel (LH2 & CNG)
- Improved engine design

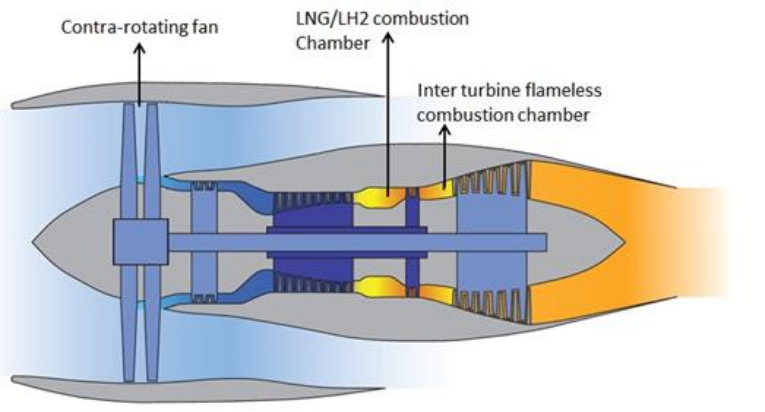

AHEAD MF-BWB

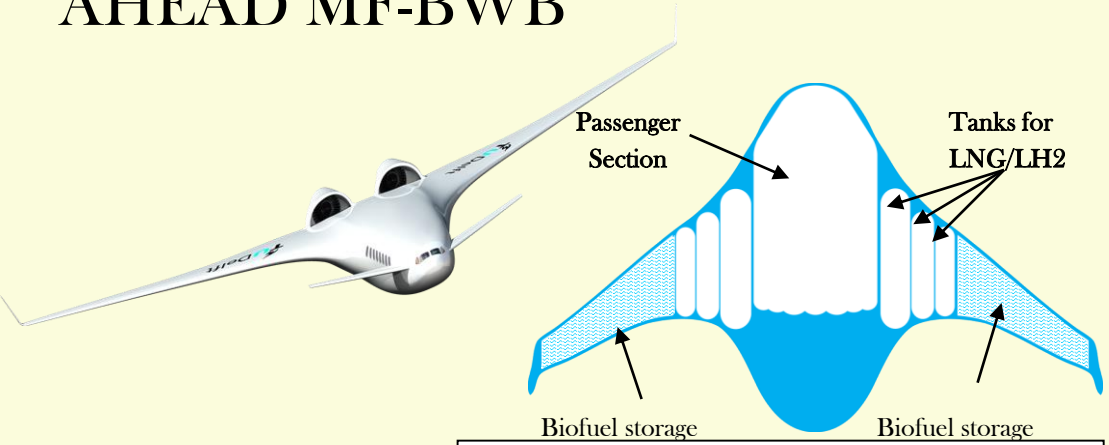

aircraft layout with cryogenic tanks & biofuels

Sketch of the AHEAD engine with two combustion chambers; primary for cryogenic fuel (H2/LNG) and secondary for jet/ bio jet fuel (kerosene) combustion

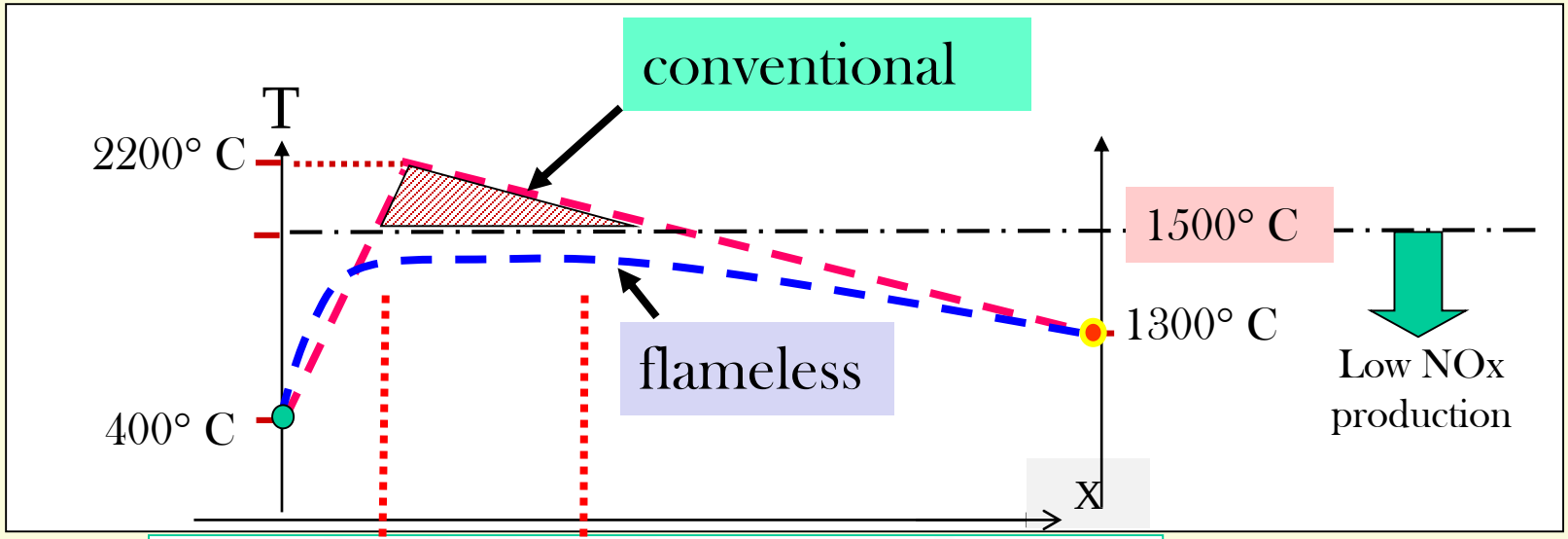

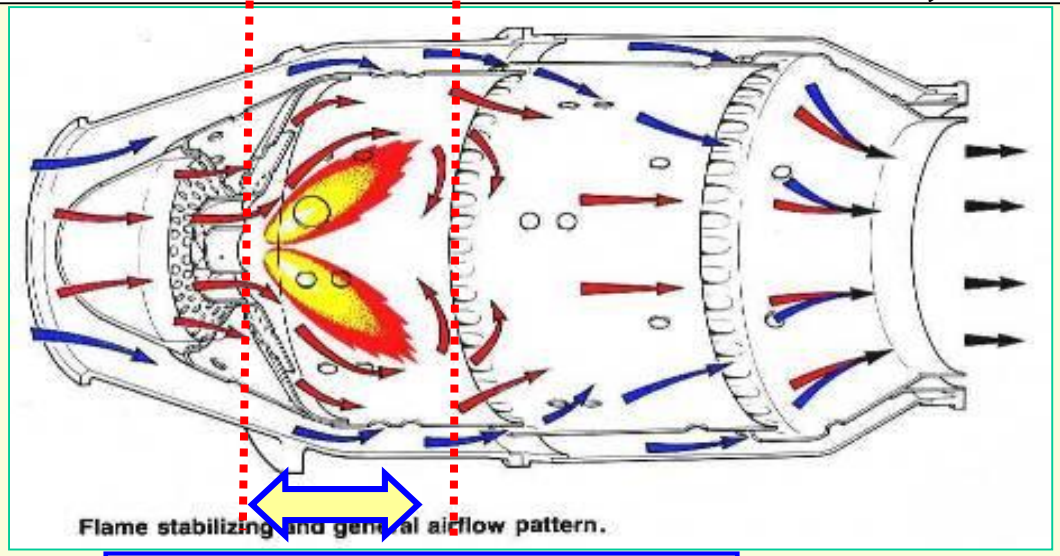

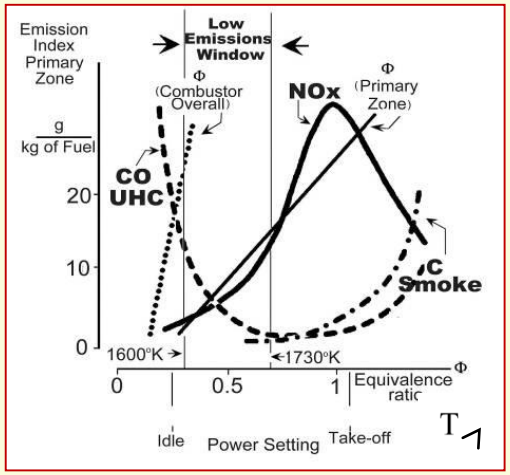

NOx FORMATION REGION

Flameless Oxidation Method for NOx Reduction

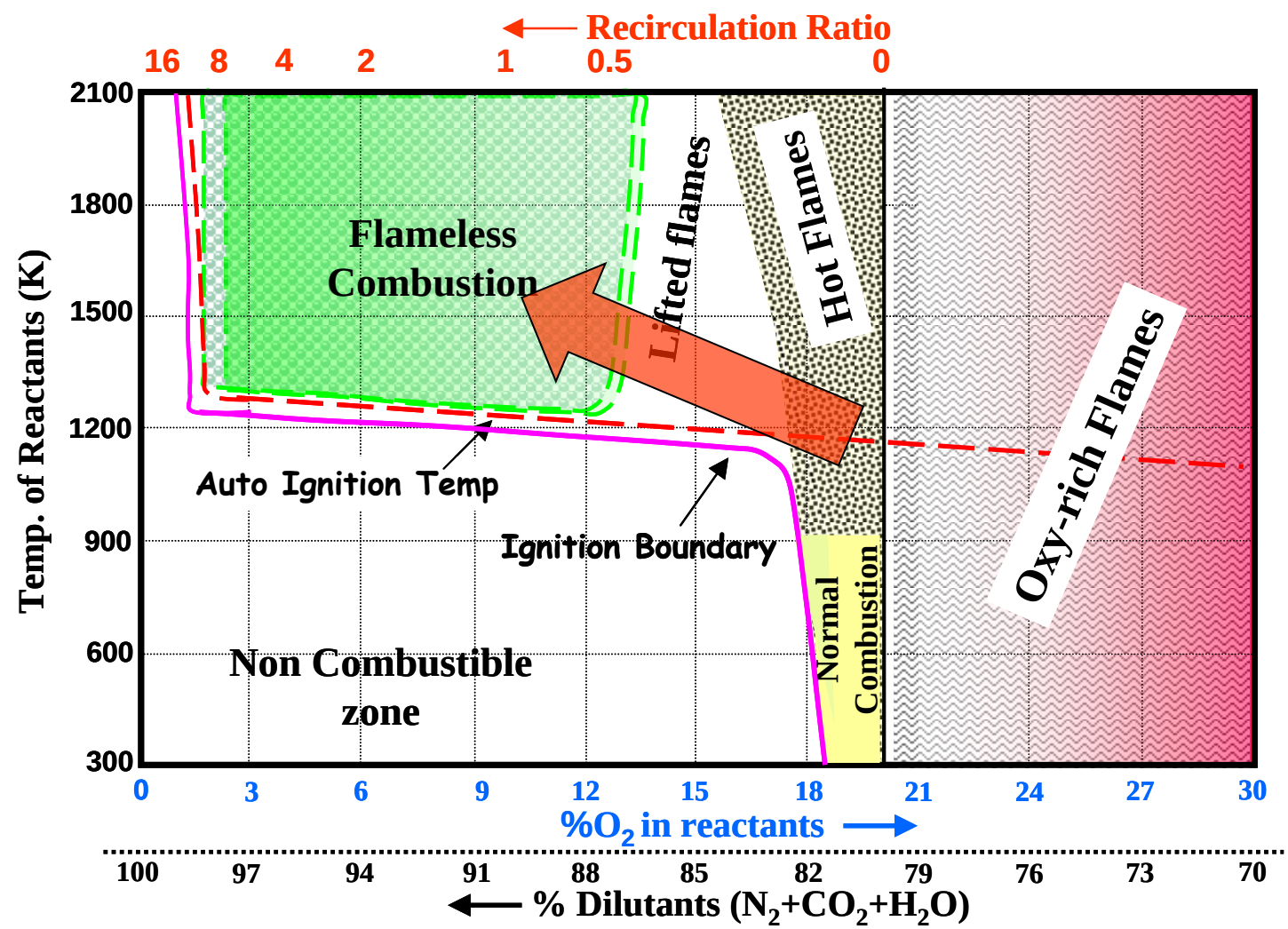

Ref.: Prof. Arvind G. Rao, TU Delft

Split ratio: 1 : 4.7

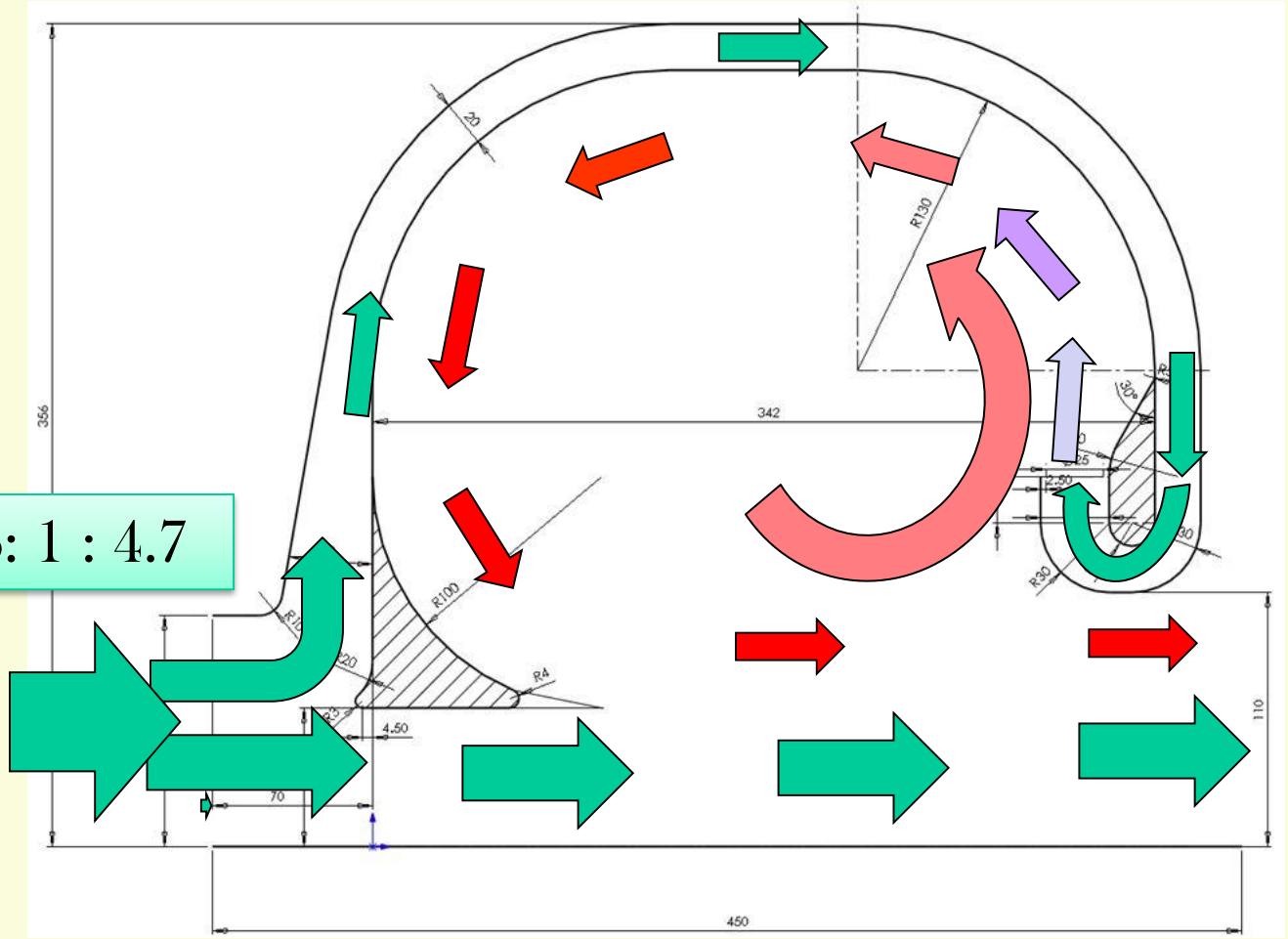

Suggested combustor configuration

Chemical Kinetic Scheme for CFD Simulations

1. Select a reduced chemical kinetic mechanism for CFD simulations for specific fuel (using surrogate fuel instead if JP-8).

2. Verify the flame characteristics and emissions using the reduced mechanism with respect to the detailed mechanism and with experimental results.

3. "Surrogate A" was selected as an alternative to represent the JP8.

	Surrogate A compounds	
Normal alkanes	n-Decane, **$C_{10}H_{22}$**	60
Cyclo alkanes	Methyl-cyclo-hexane, **C_7H_{14}**	20
Aromatics	Toluene, **C_7H_8**	20
		100%

Simplified Chemical Kinetics Models for CFD simulations of Jet fuel combustion

Comparison between detailed and reduced ("Kundu – Creck') mechanism for "Surrogate A" and an experimentally based 2-step mechanism by Meredith and Black (2006) was performed using CHEMKIN

Evaluation of different reduced model using CHEMKIN simulations

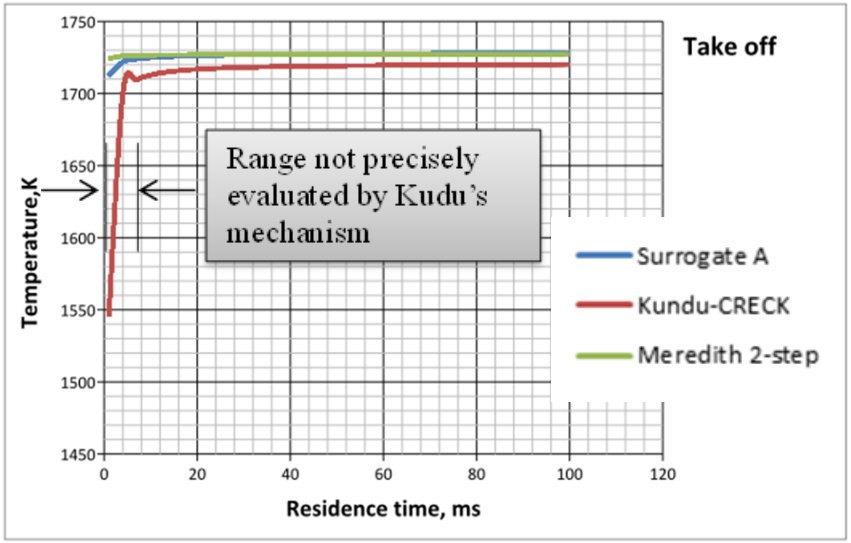

Temperature vs. residence time

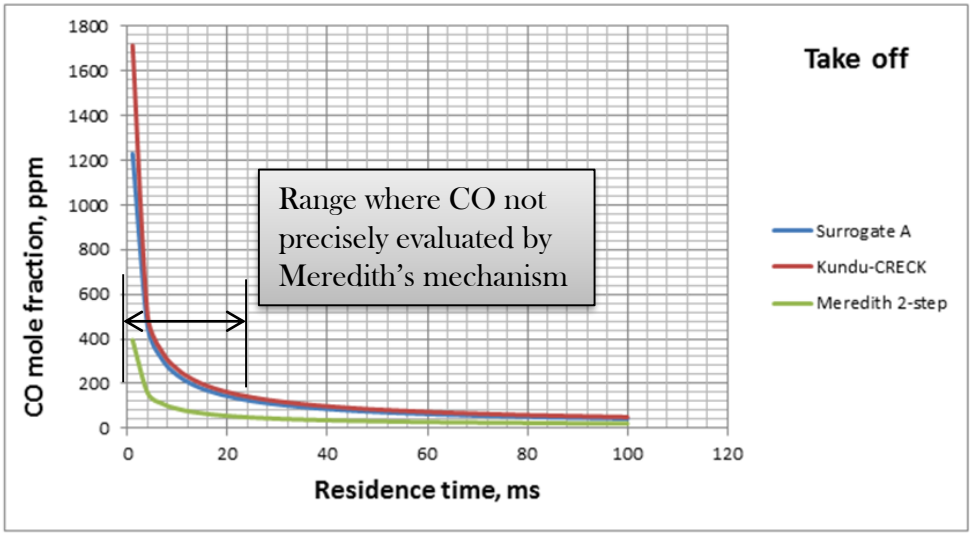

CO mole fraction vs. residence time

In GT and Jet Engine, the relevant residence time range is 1~ 10ms & t*he temperature is the important parameter. Hence, the Meredith 2-step mechanism was selected!*

Take Off. Inlet condition:Input mass gas fraction: gH2O=0.0656, gO2=0.1731, gN2=0.7613, mixture flow rate= 21.73 kg/s, T=1185K . Kerosene mass flow rate=0.39 kg/s, Tfuel=300K. P=8.56 bar.

Experimental Verification of the detailed chemistry of "Surrogate-A" Fuel (from literature)

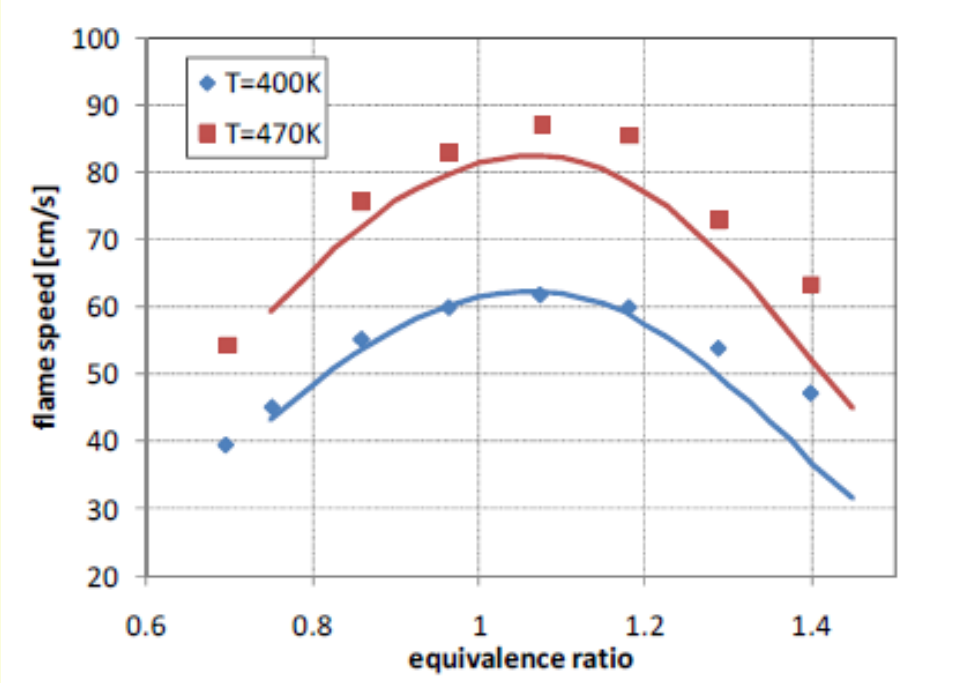

Comparison between model Surrogate A and experimental data for Jet A
at two initial temperatures

From: K. Kumar, C.-J. Sung, X. Hui, 47th AIAA Aerospace Sciences Meeting January 2009, Orlando.

Sample Results: Effect of air vitiation on ignition time

Laboratory test conditions for AHEAD, T=973K

t-ignition = 35 ms

Reduced Kundu – Creek (C12H23)

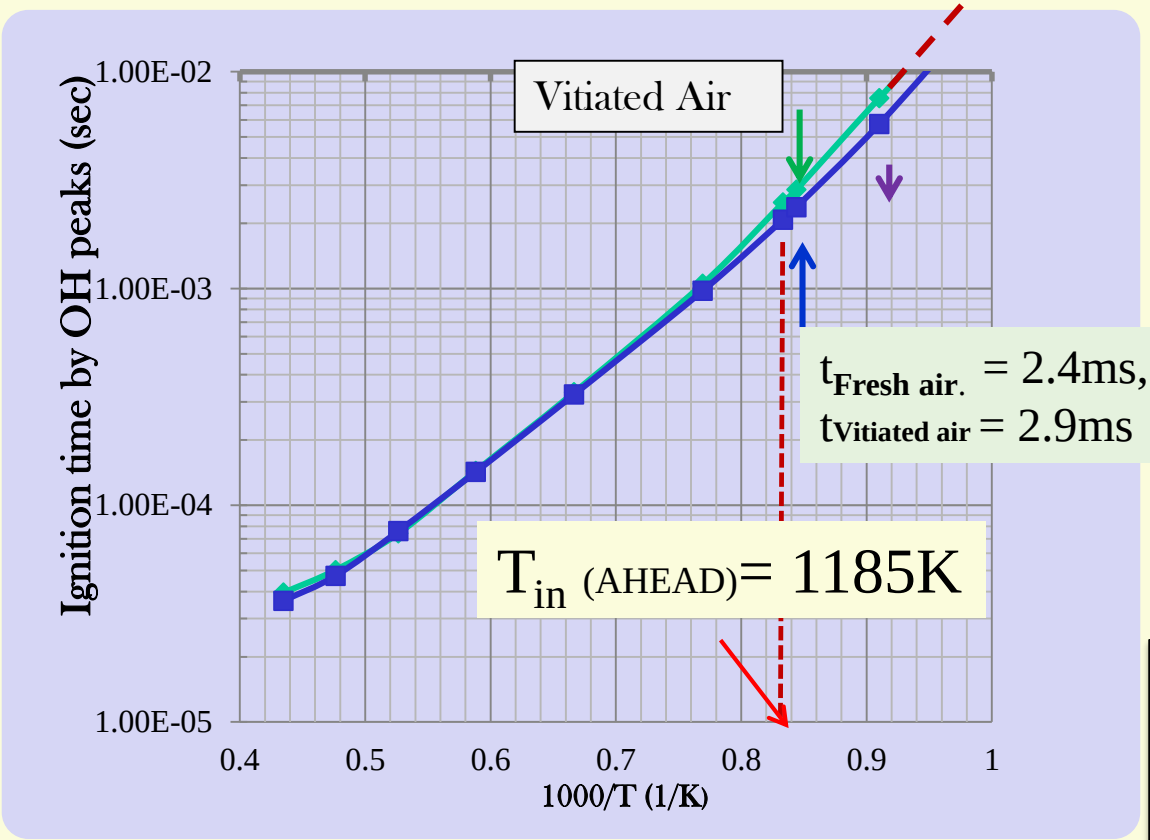

Air Vitiation slows combustion process

In practice, the reactance increases their temperature above inlet temperature by mixing, thus reducing the actual ignition delay time.

Effect of vitiation on ignition time for T_{in} = 1185K and T_{exit}=1800 K

Sample Results: Effect of air vitiation on combustion temperature

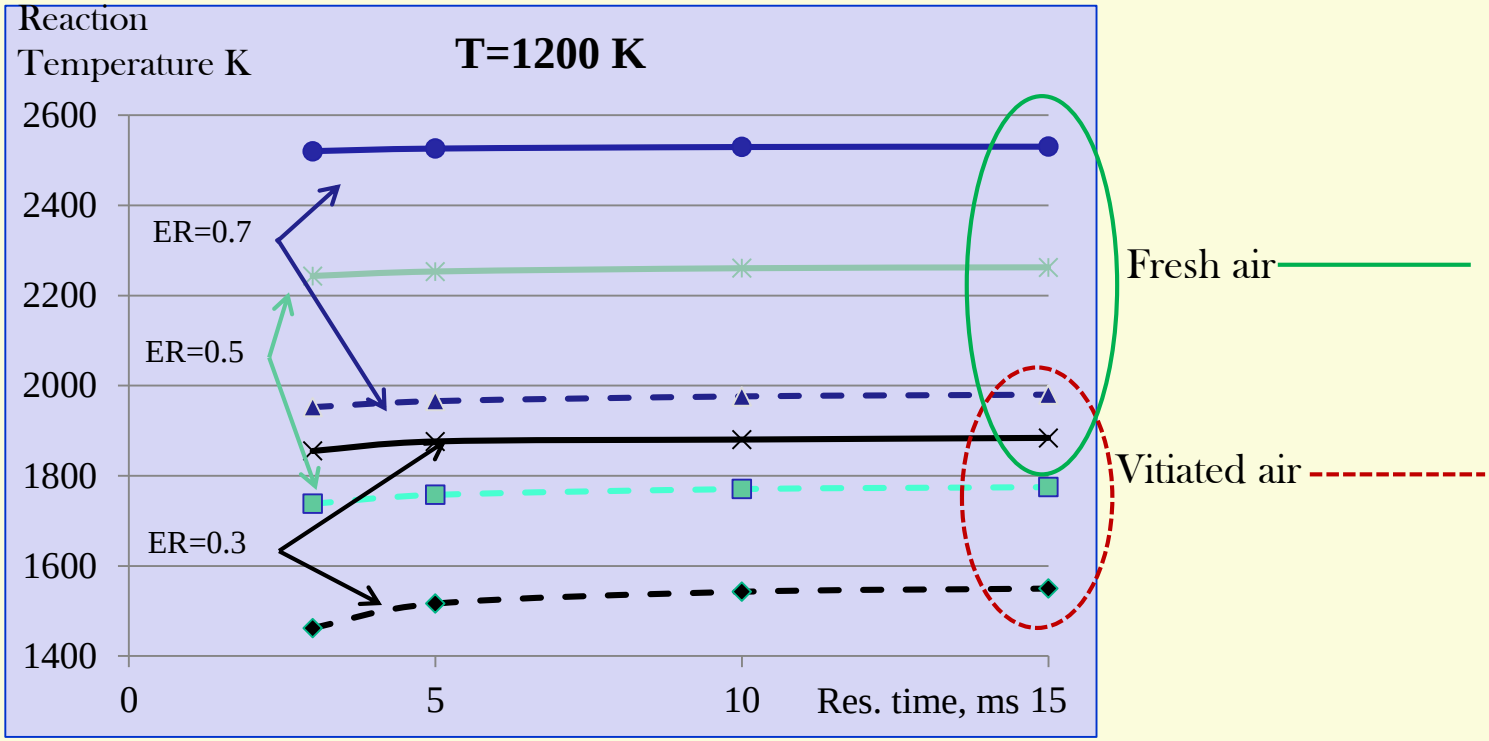

Vitiation reduces combustion temperature

CFD Simulations

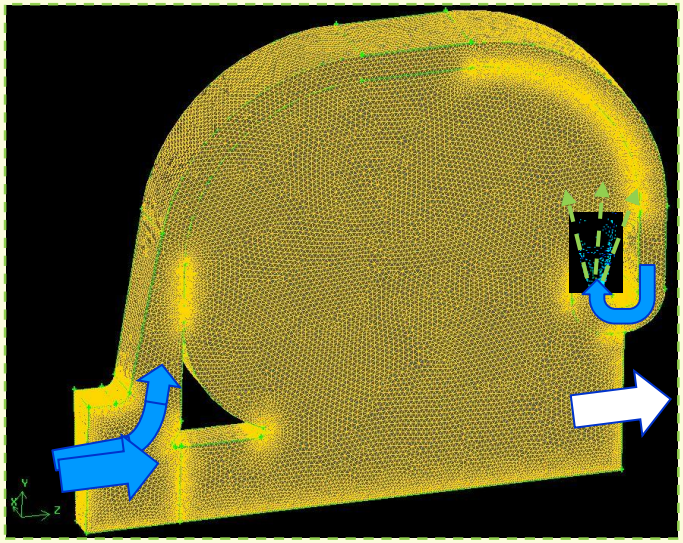

Mesh;
green arrows - fuel inlets, blue ones - air inlets,
white – outlet

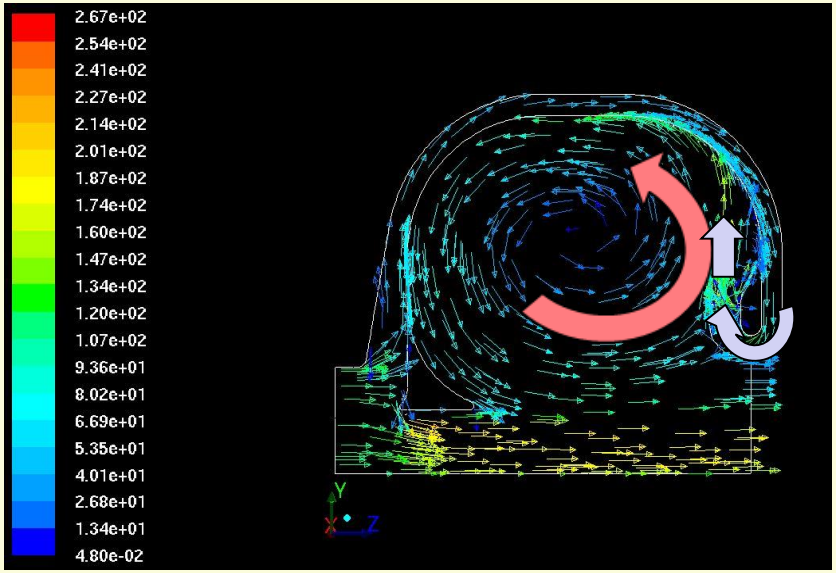

Fluent Code
Discretization – 2-nd order
Turbulent model – K - ε
Combustion – EDC (Eddy Dissipation Concept) model.
2- Meredith & Black reaction mechanism

→ Recirculation Ratio ~ 1.5

Computational mesh &Velocity vectors indicating the large internal circulation

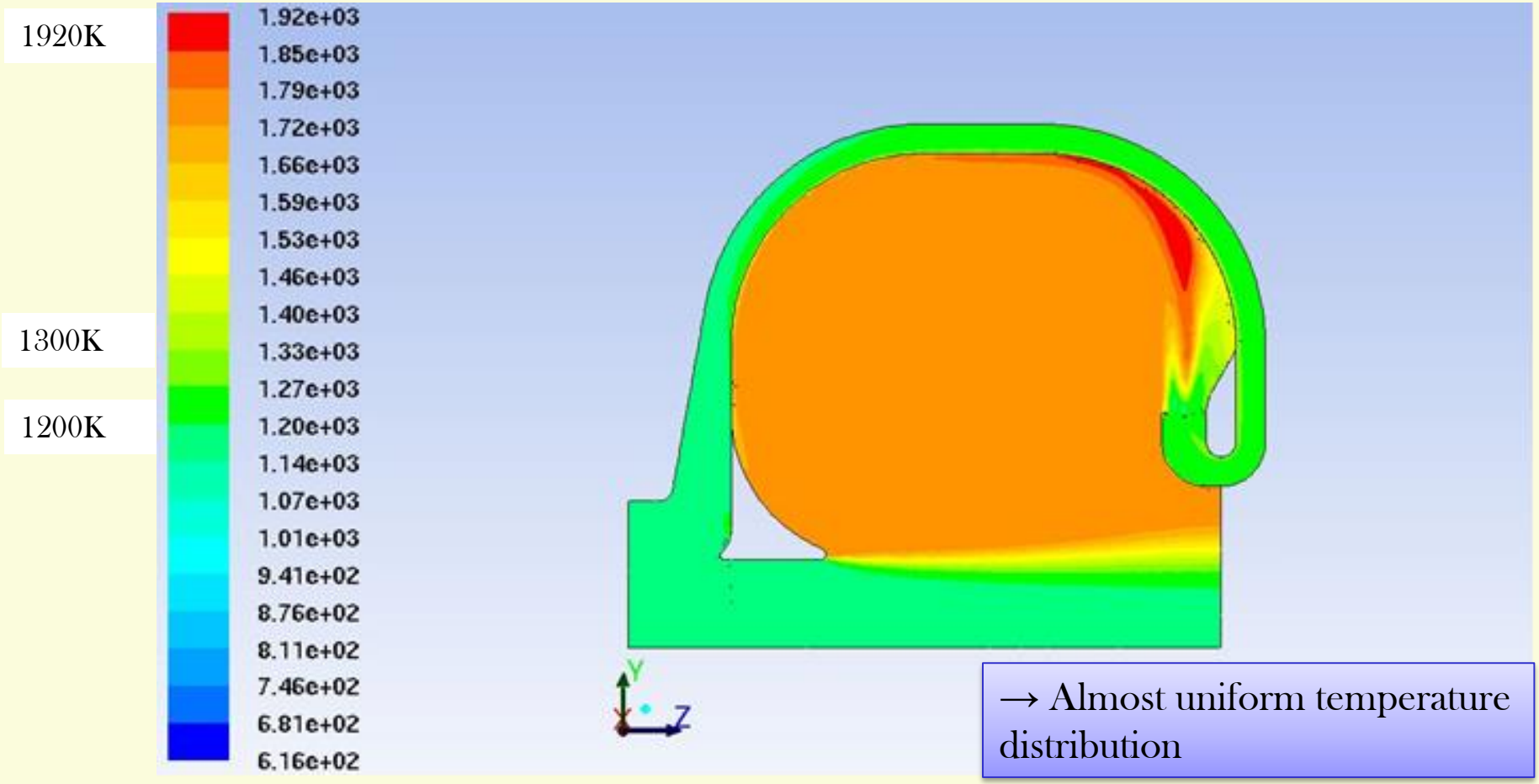

Mass averaged static temperature at the exit 1299K

Static temperature distribution

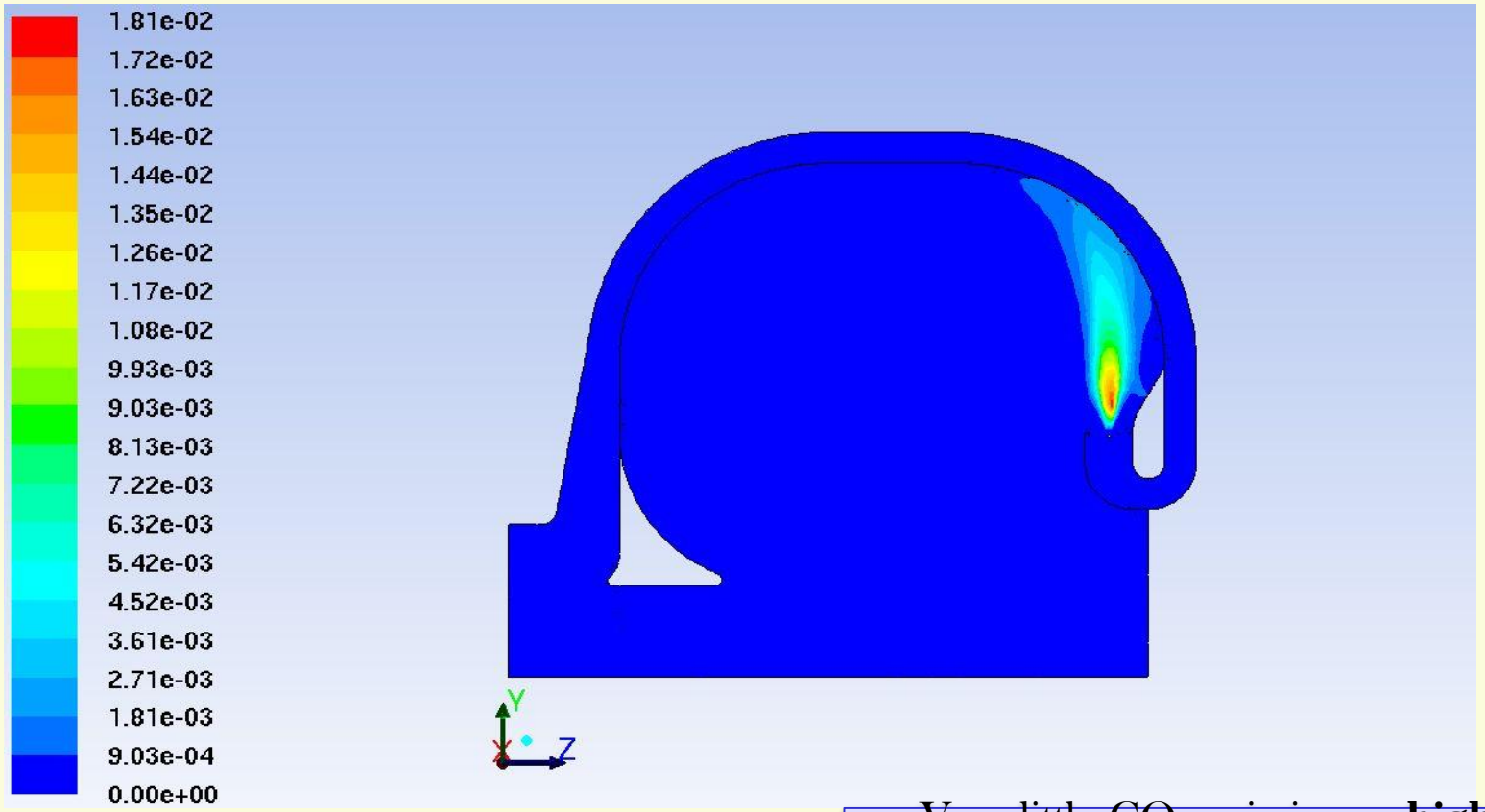

→ Very little CO emission →**high η_b**

CO mass-fraction at the exit – 30.7ppm

CO distribution

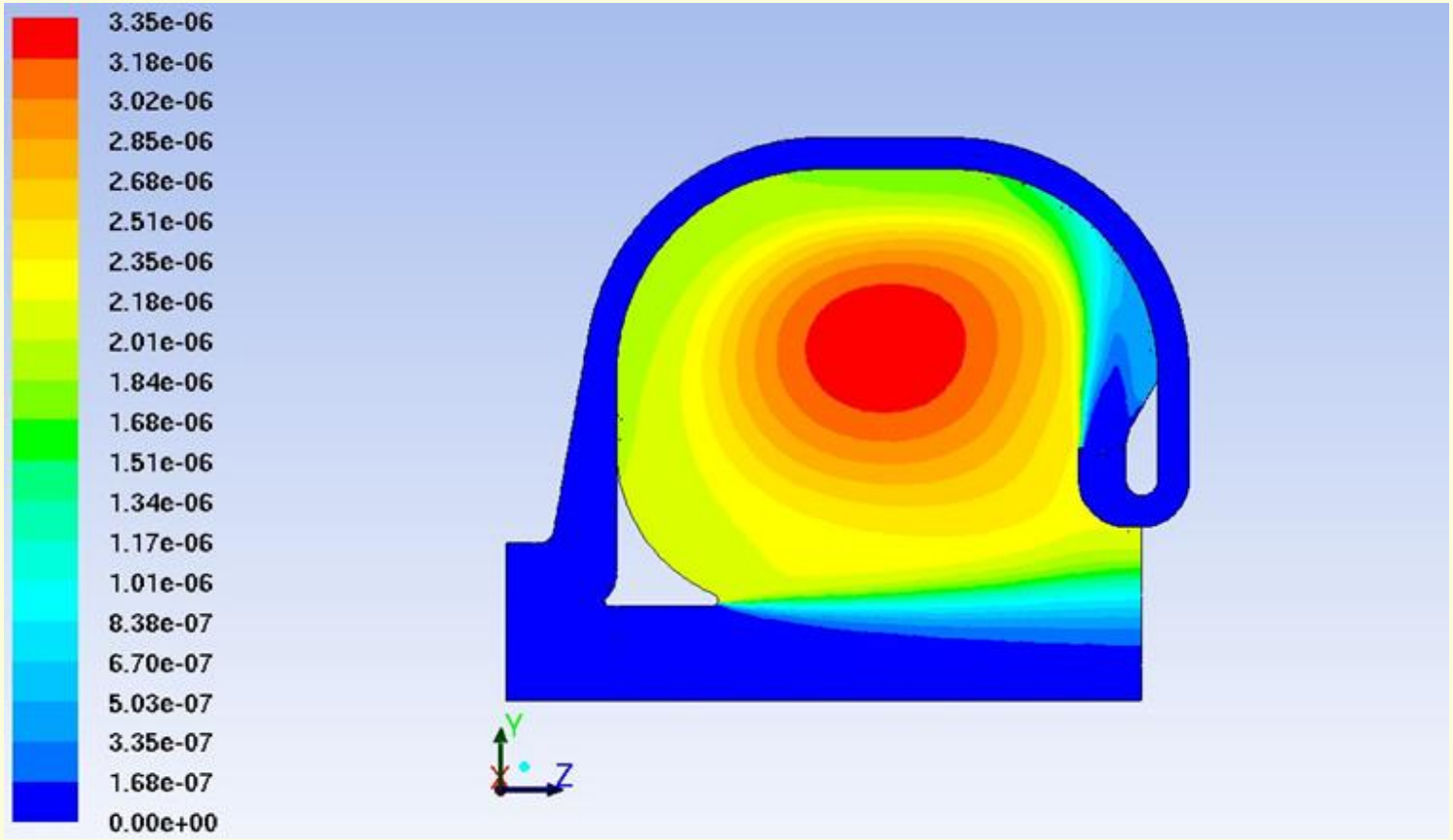

NOx mass-fraction at the exit – 0.45ppm

→ Very Low NOx emission

NO distribution

Experimental verification of CFD simulations

- Operating pressure 1bar (atmosphreic), maximum air supply of 10 gr/sec
- Size limitation of the test chamber (300 mm in diameter) determined the need to limit the model to 1/3 linear geometrical scale
- **similar residence time** - Velocities reduced to 1/3
- **similar temperature values at combustion zone and at the exit of the combustor.**

Schematic

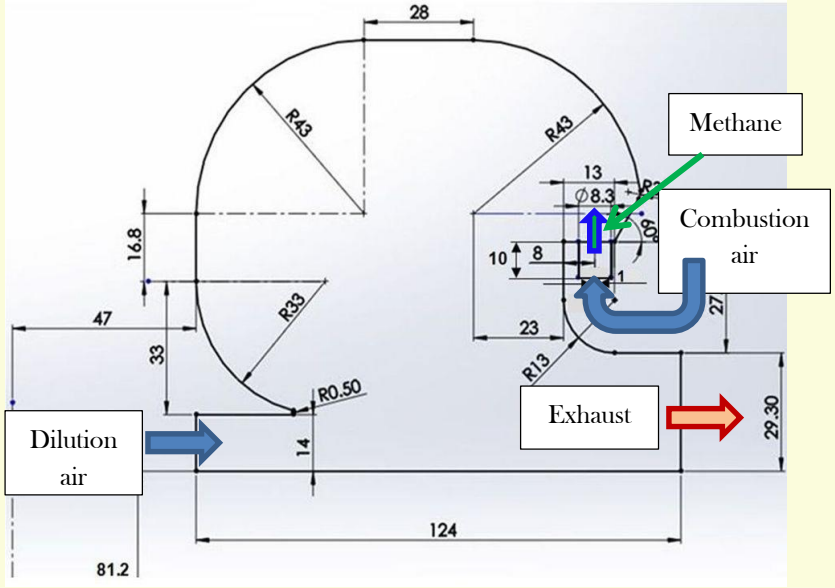

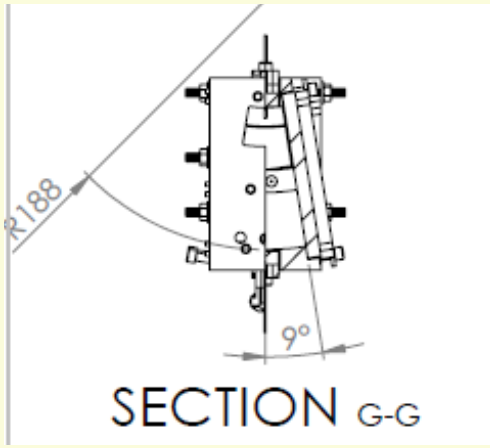

Design

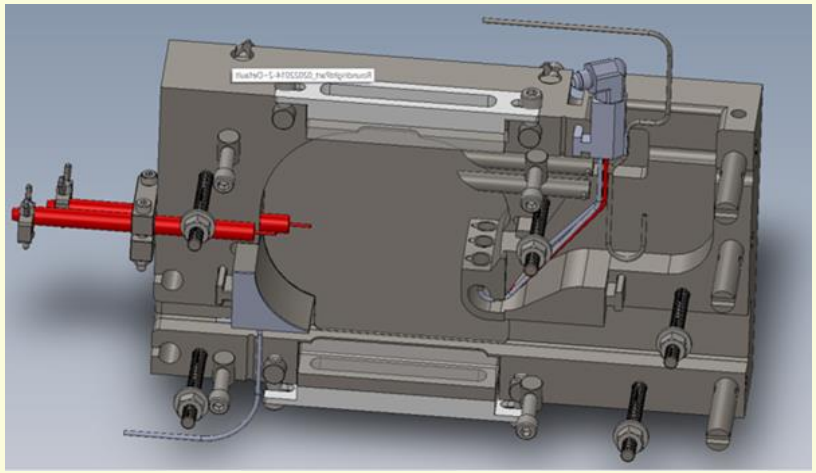

Metal SS 310

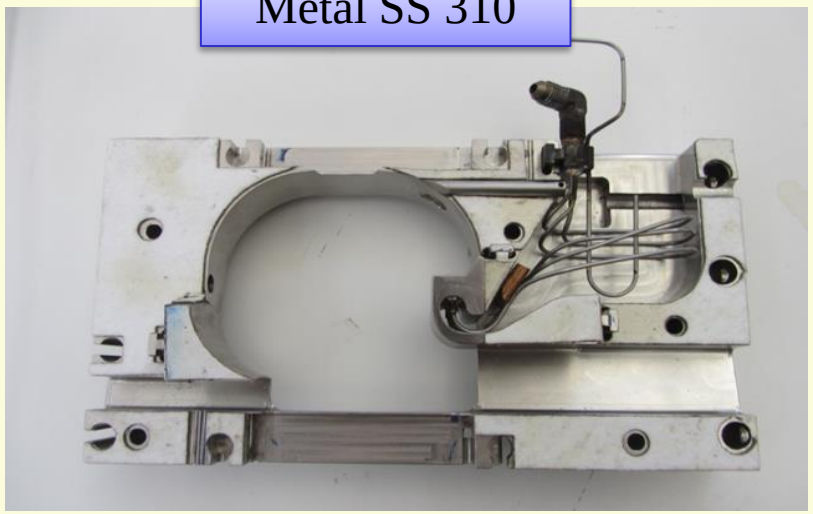

The reduced experimental model

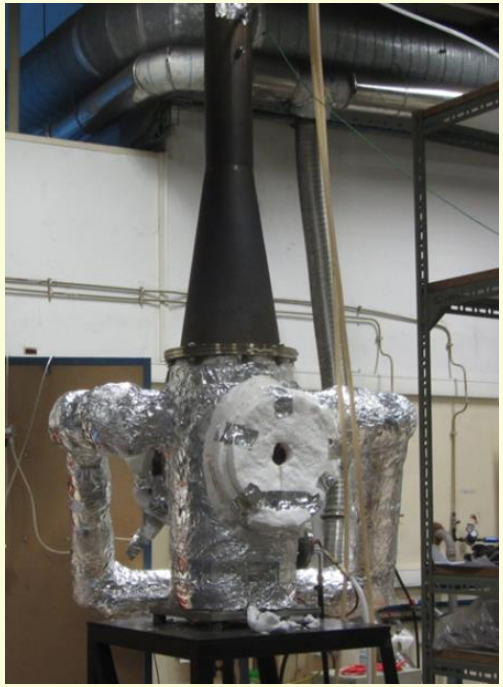

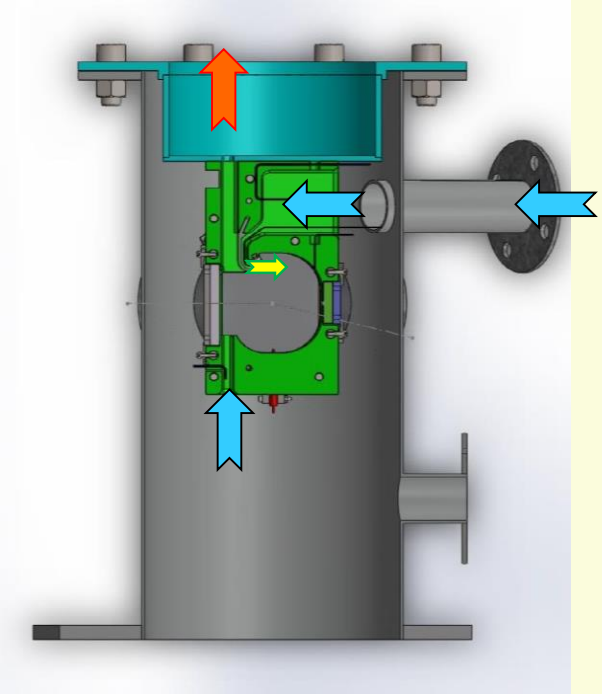

Experimental facility (IST, Lisbon, Portugal)

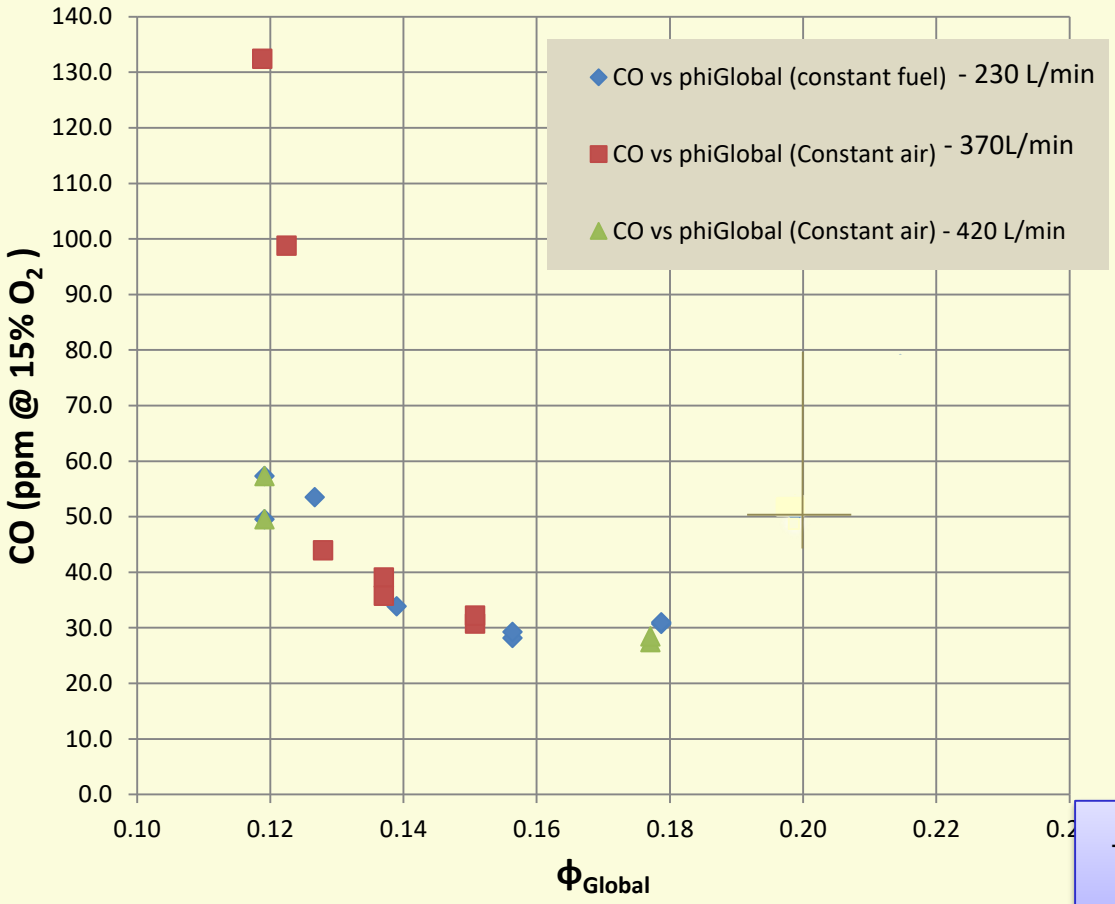

→ CO emission is reduced with increasing ϕ_{Global}

Variation of CO with Φ_{global},

air flow rate 230, 370 and 420 L/min, no water and no N2 addition

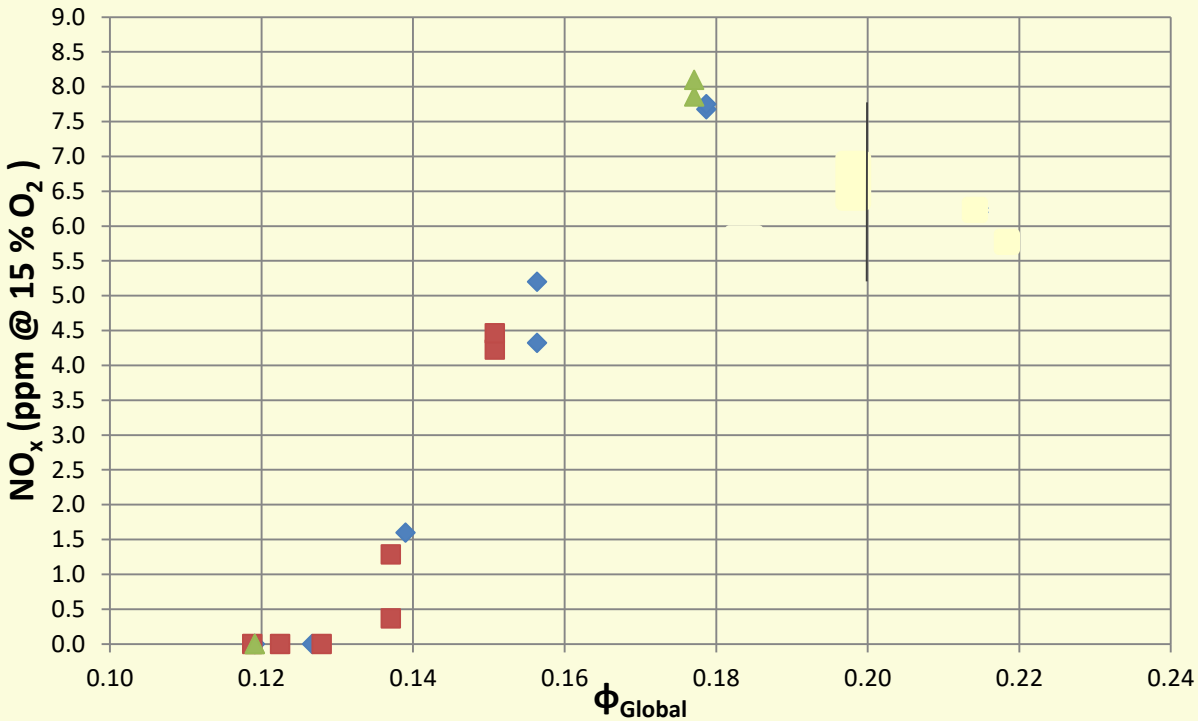

→ NOx emission is increase with increasing ϕ_{Global}

Variation of NOx with Φ_{global},

air flow rate 230, 370 and 420 L/min, no water and no N2 addition

Turbo and Jet Engine Laboratory
Technion – Israel
www. jet-engine-lab.technion.ac.il

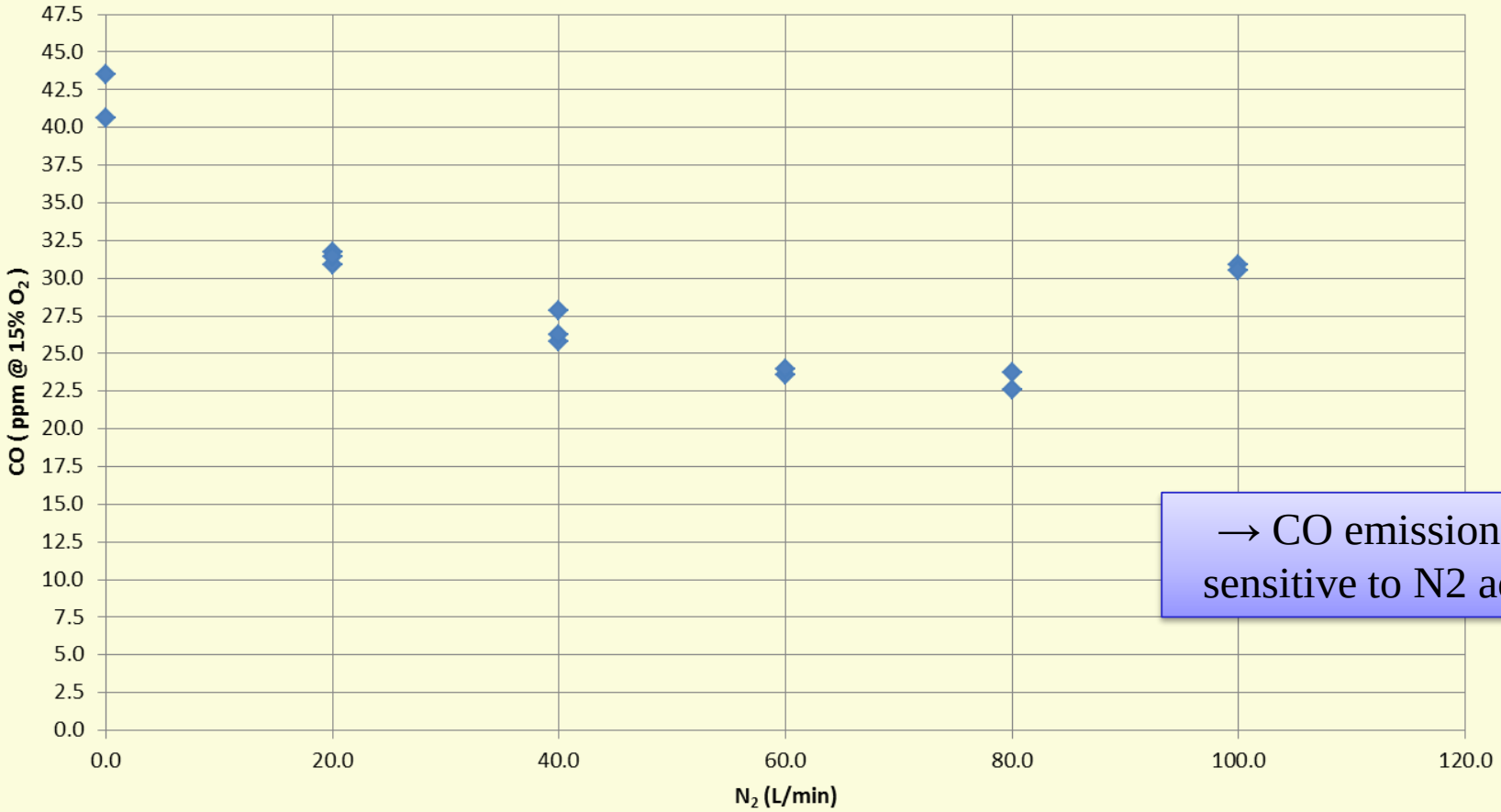

→ CO emission is not sensitive to N2 addition

Variation of CO with nitrogen addition,

air flow rate 230 L/min, no water addition

Power: 2.8 kW – φ Global : 0.19 -- Air : 230 L/min

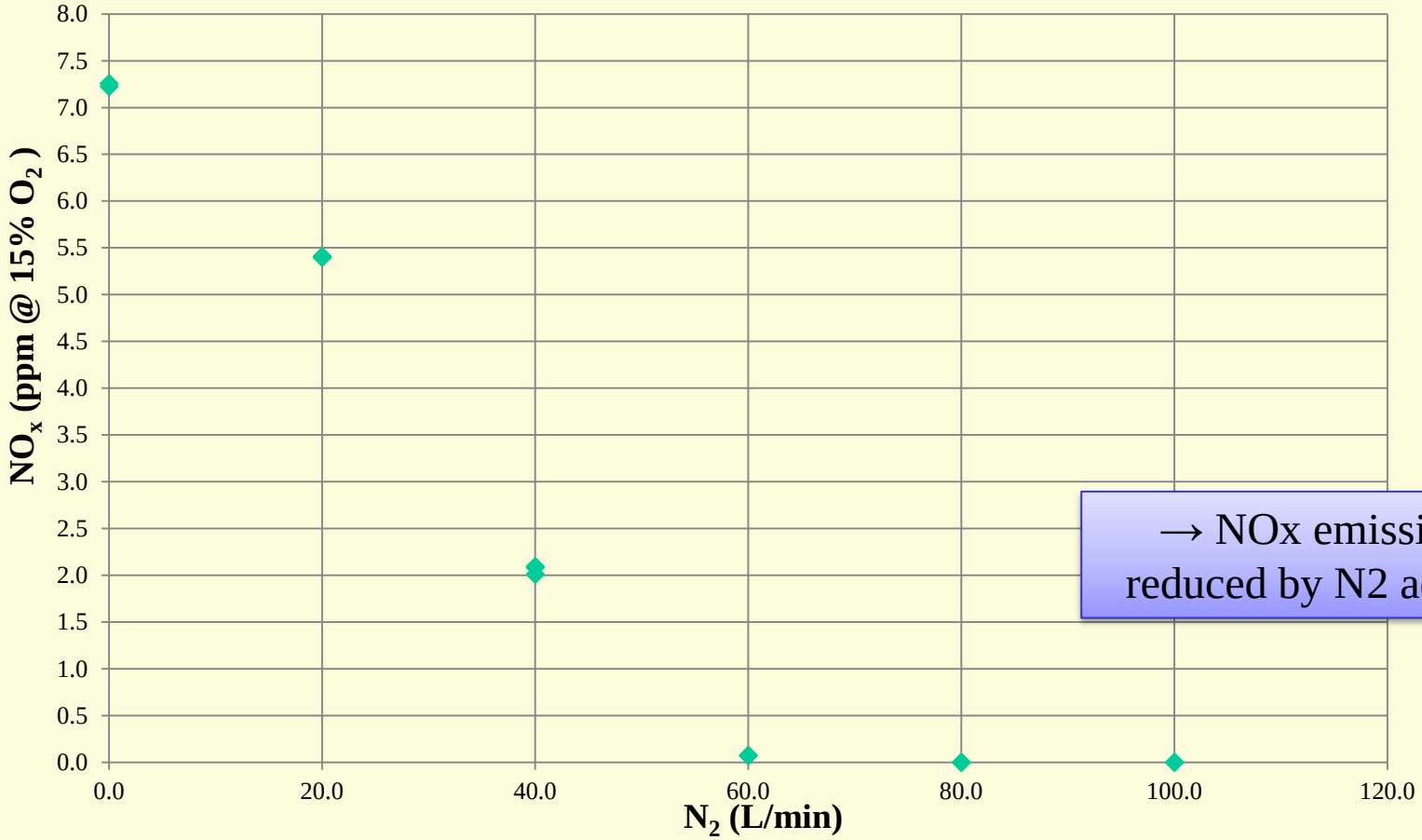

→ NOx emission is reduced by N2 addition

Variation of NOx with nitrogen addition, air flow rate 230 L/min, no water addition.

Power: 2.8 kW --φ_{Global} : 0.19 , Water: 0 g/h

Turbo and Jet Engine Laboratory
Technion – Israel
www. jet-engine-lab.technion.ac.il

0 lpm N2 addition

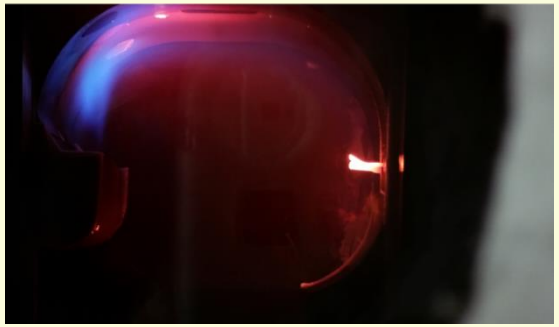

20 lpm N2 addition

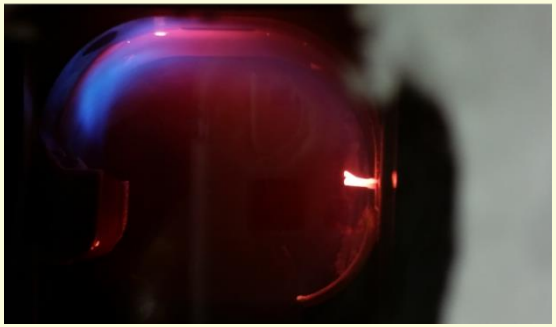

40 lpm N2 addition

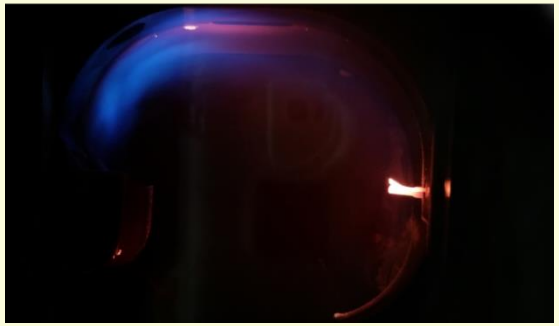

60 lpm N2 addition

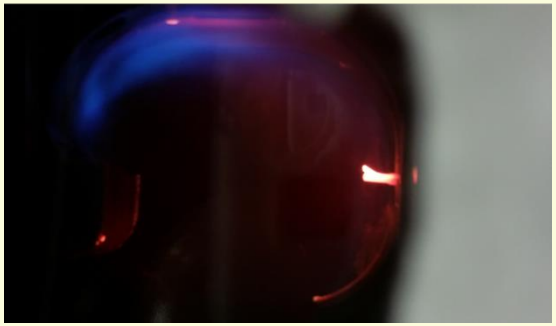

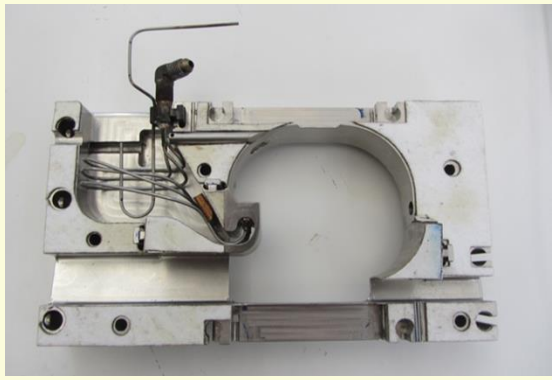

80 lpm N2 addition

100 lpm N2 addition _1

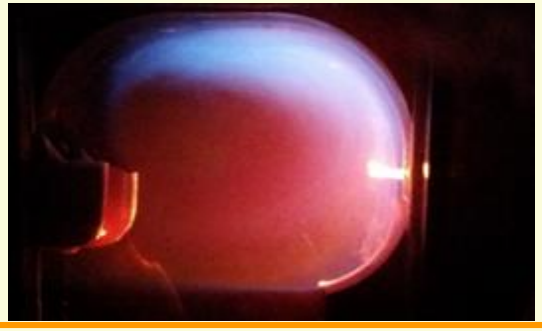

The flame while increasing N2 flow rates,

airflow 230 L/min, power: 2.8 kW – φ Global : 0.19

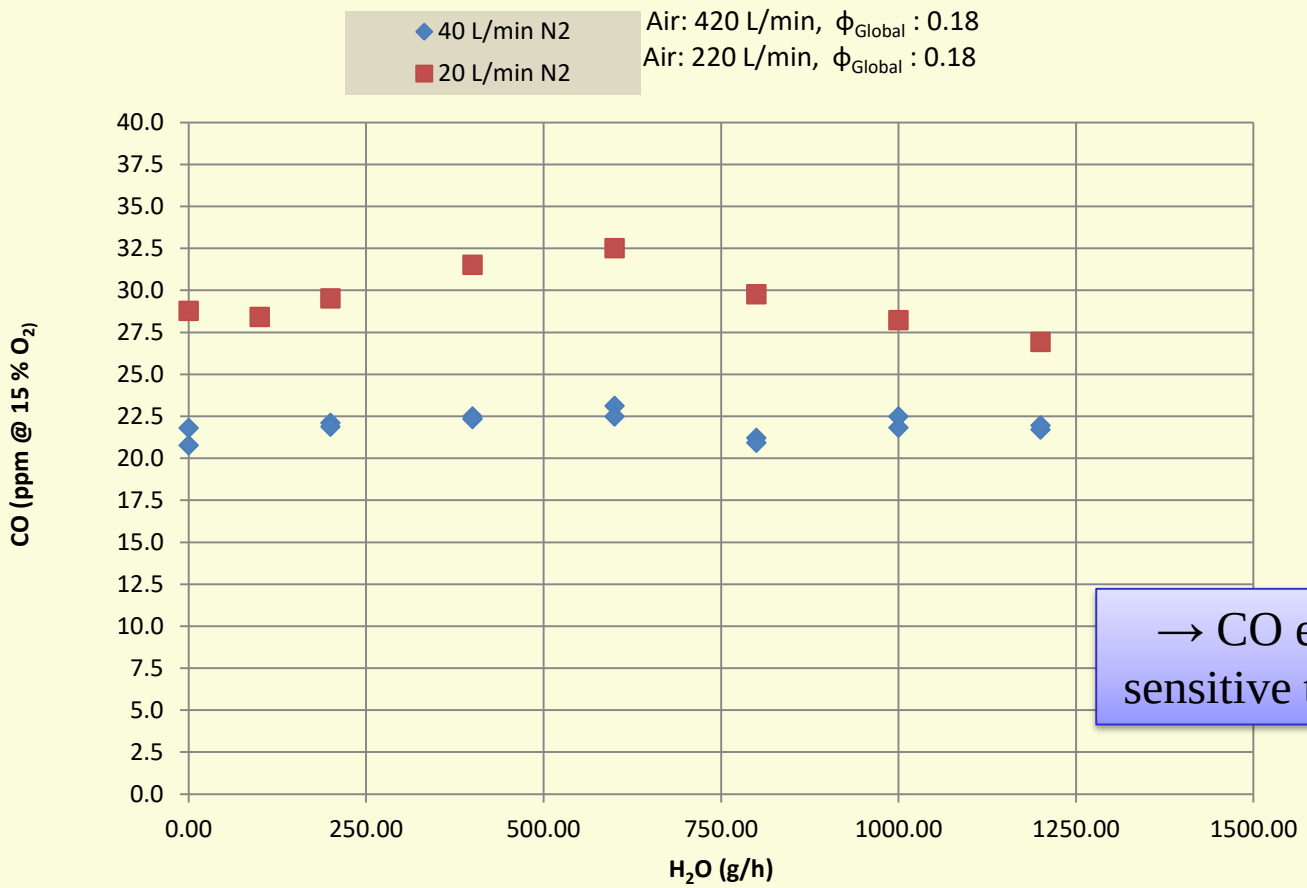

→ CO emission is not sensitive to H2O addition

Variation of CO with H2O,

Φ_{global} =0.18; blue: Air = 420 L/min, N2 = 40 L/min; red:, Air = 220 L/min, N2 = 20 L/min

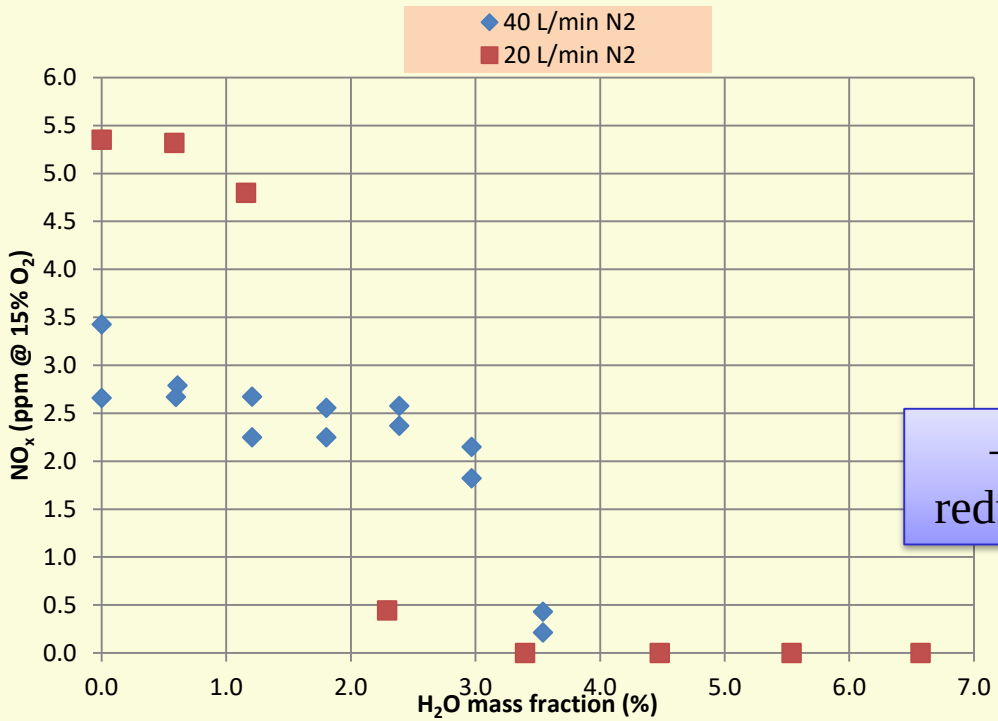

→ NOx emission is reduced by H2O addition

Variation of NOx with % H2O,

Φ_{global} =0.18; Blue: Air = 420 L/min, N2 = 40 L/min, red: Air = 220 L/min, N2 = 20 L/min

CFD study of the experimental model

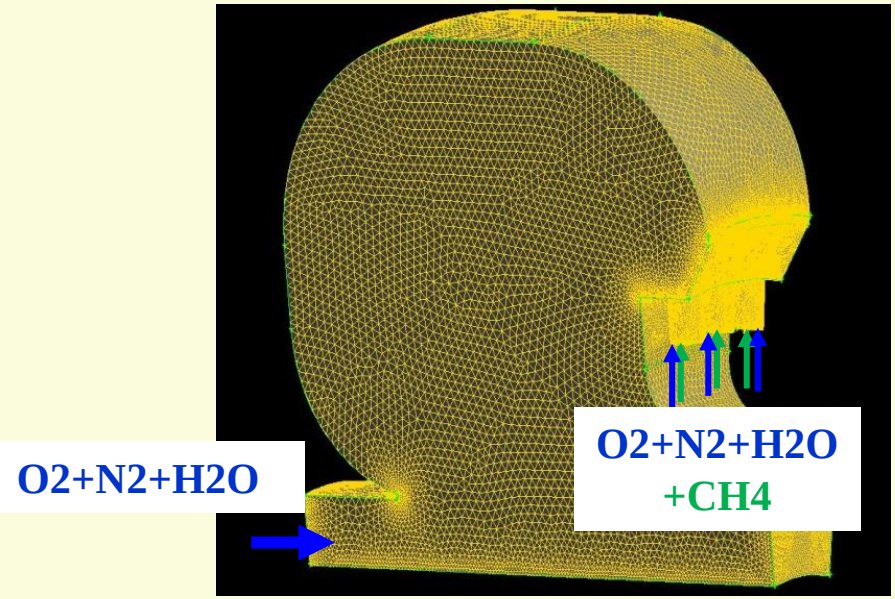

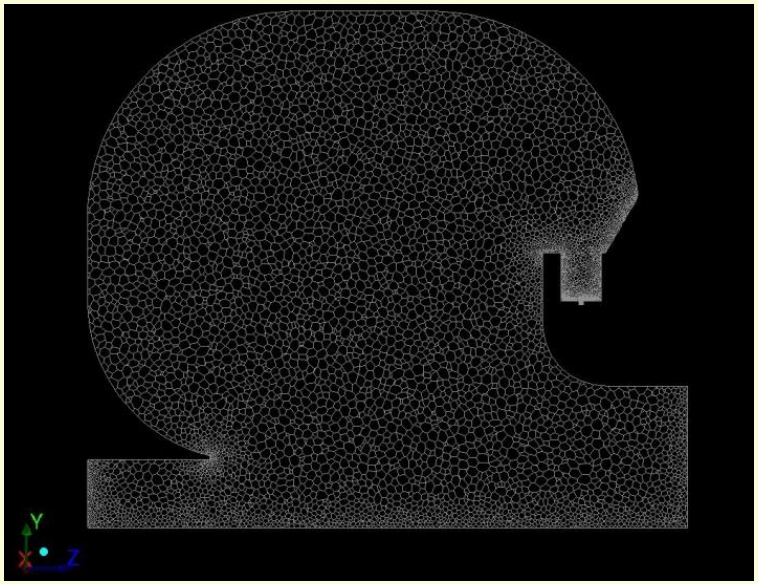

Split ratio: 1 : 2.7

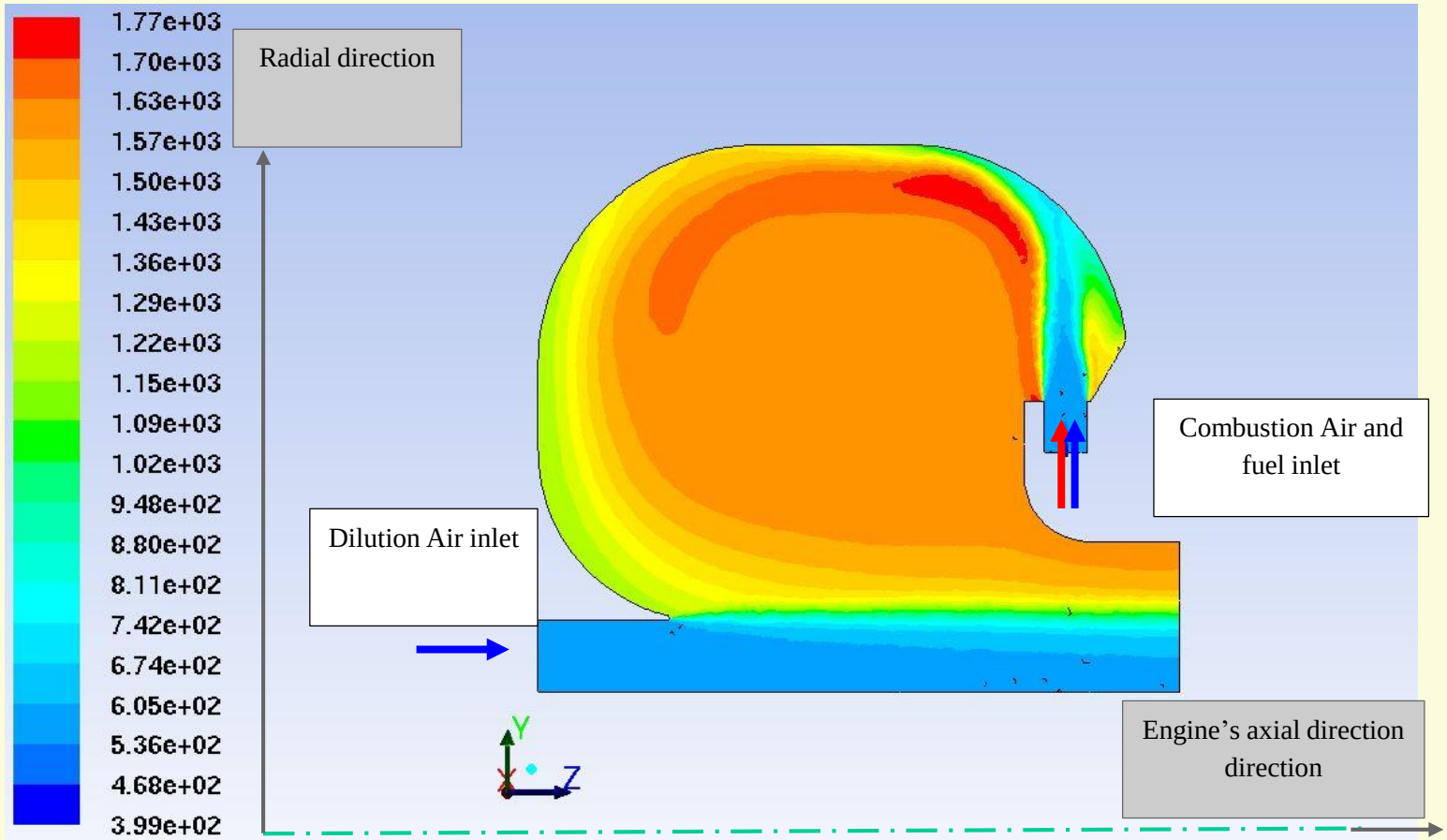

→ Less uniform temperature distribution, probably due to lower mixing

Static temperature distribution:

average temperature at the exit is 825K and maximum temperature is 1770 K

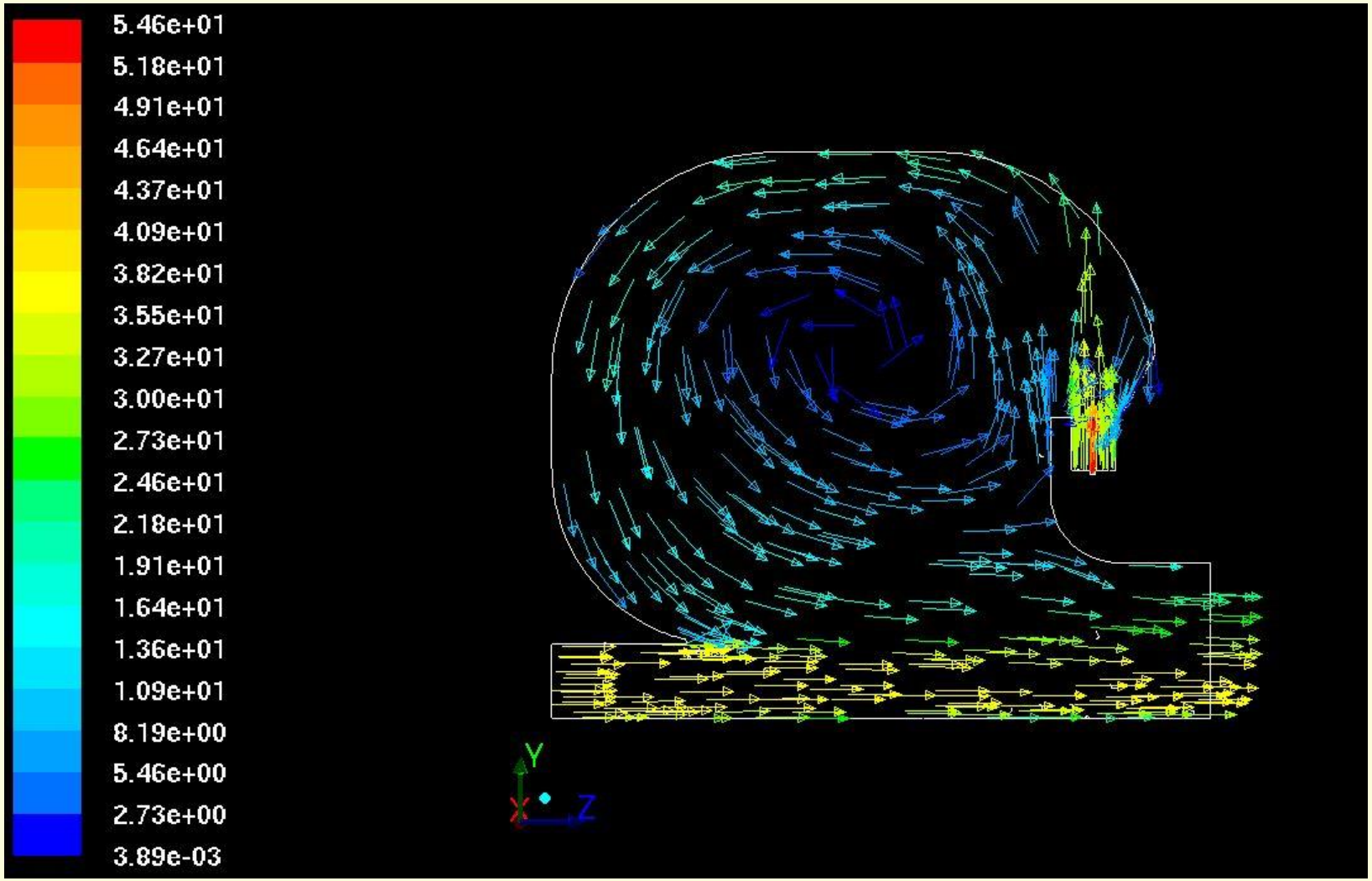

Velocity field (m/s)

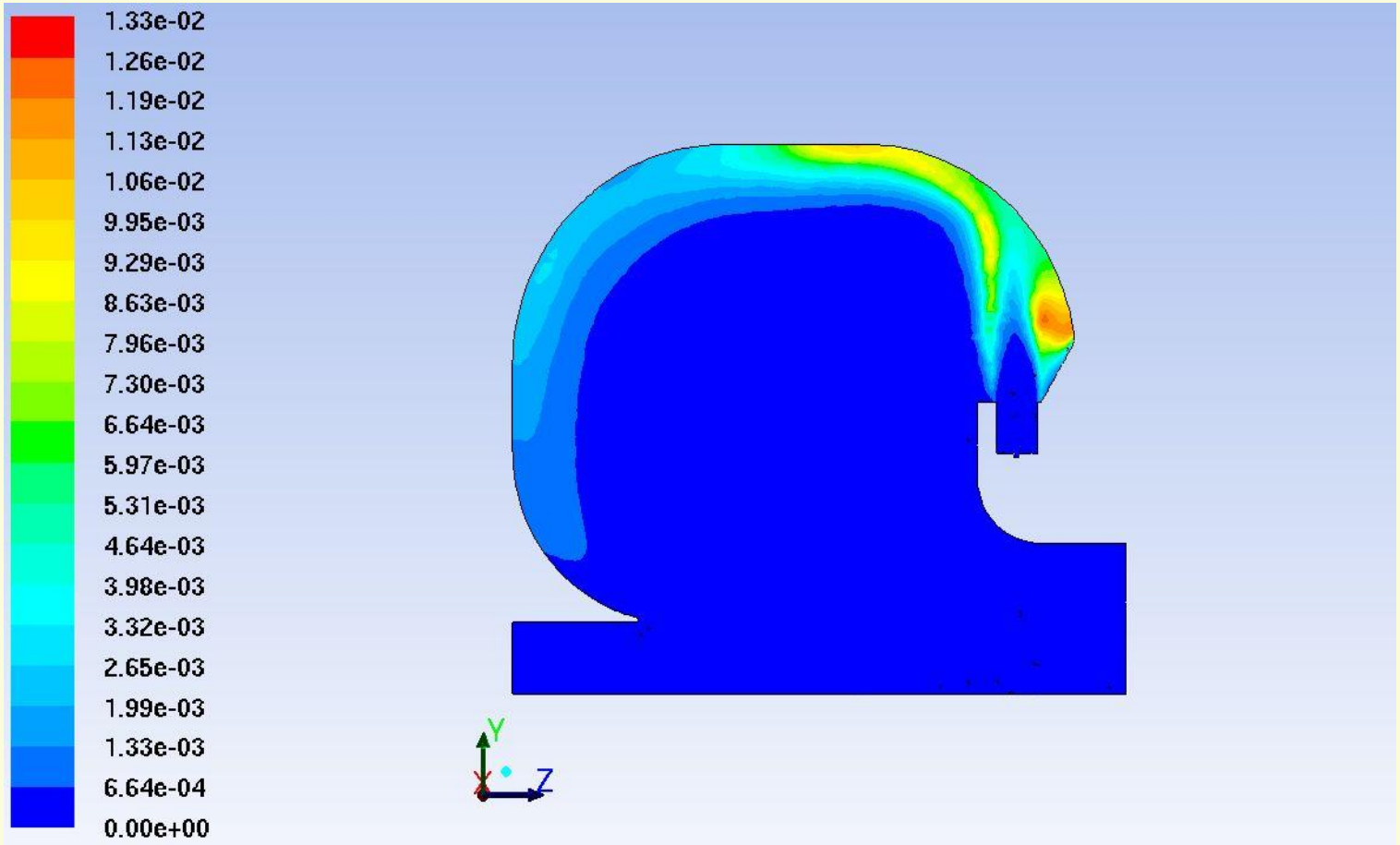

[CO] at the exit ~ 41 ppm

→ Comparable low level of CO emission as in full scale →**high ηb**

CO mass-fraction

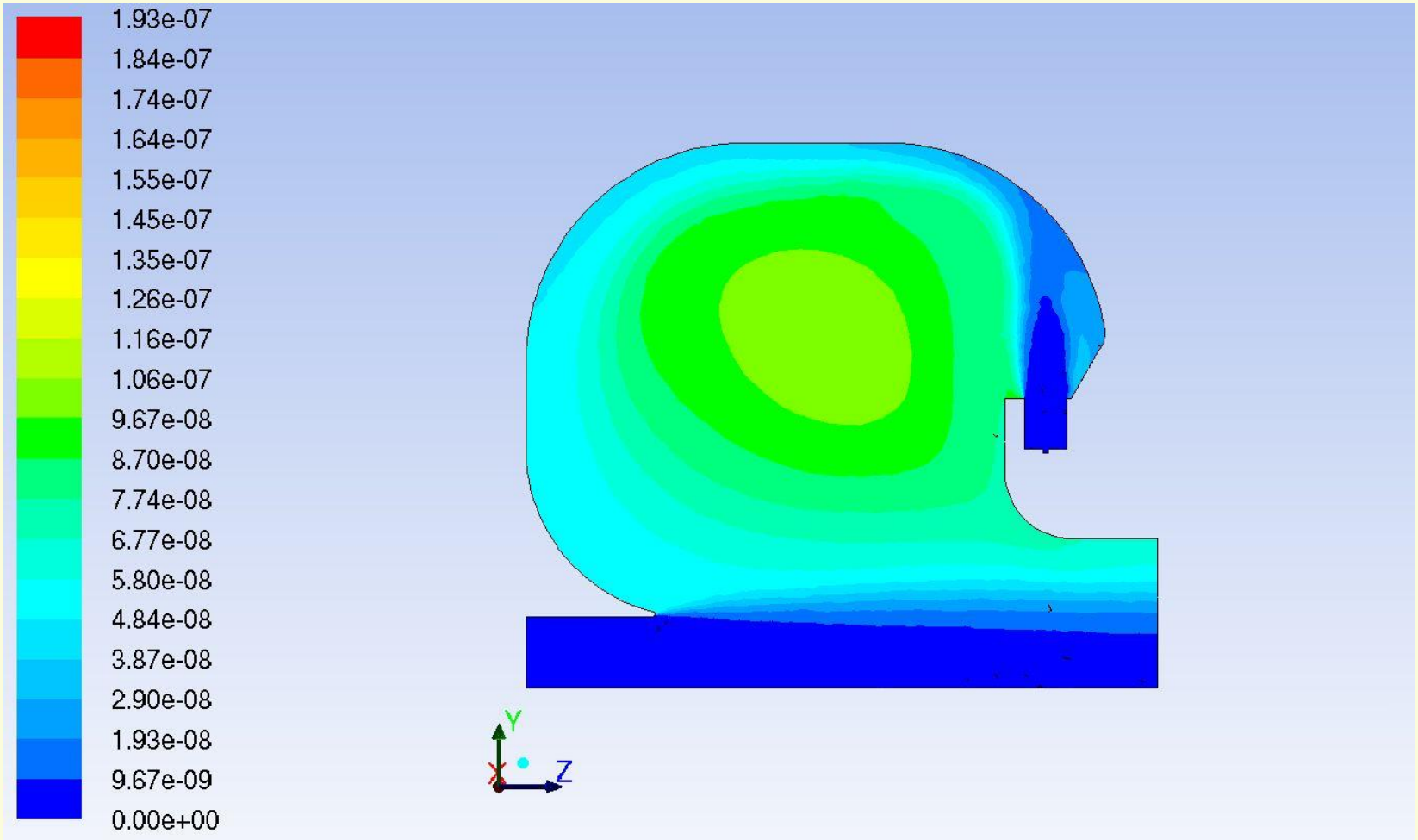

[NO] at the exit ~ 0.016 ppm

→ Comparable very low NOx level of NOx emission as in full scale

NO mass-fraction

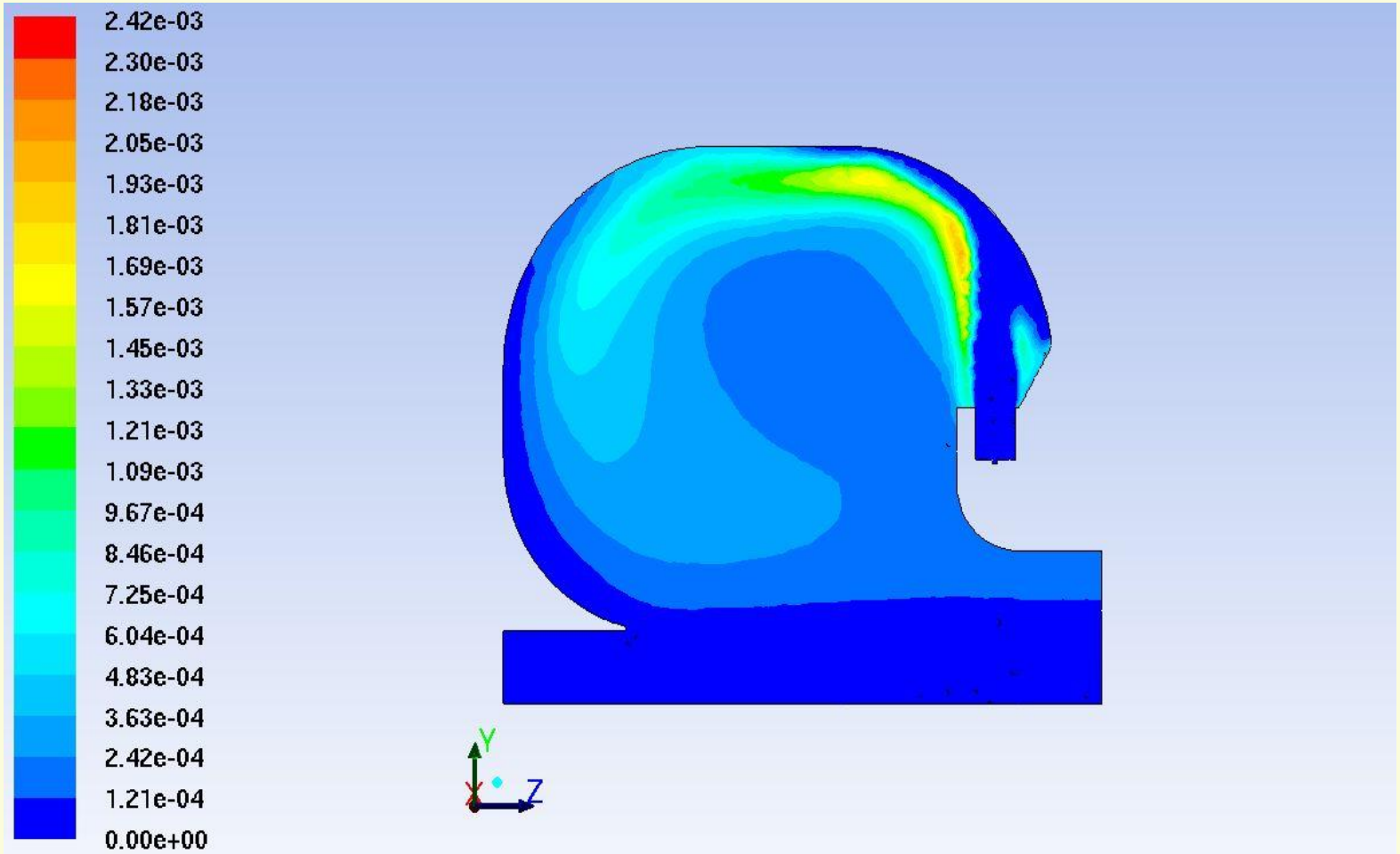

→ Shallow gradient s of OH → Distributed reaction → Flameless Oxidation

OH mass-fraction

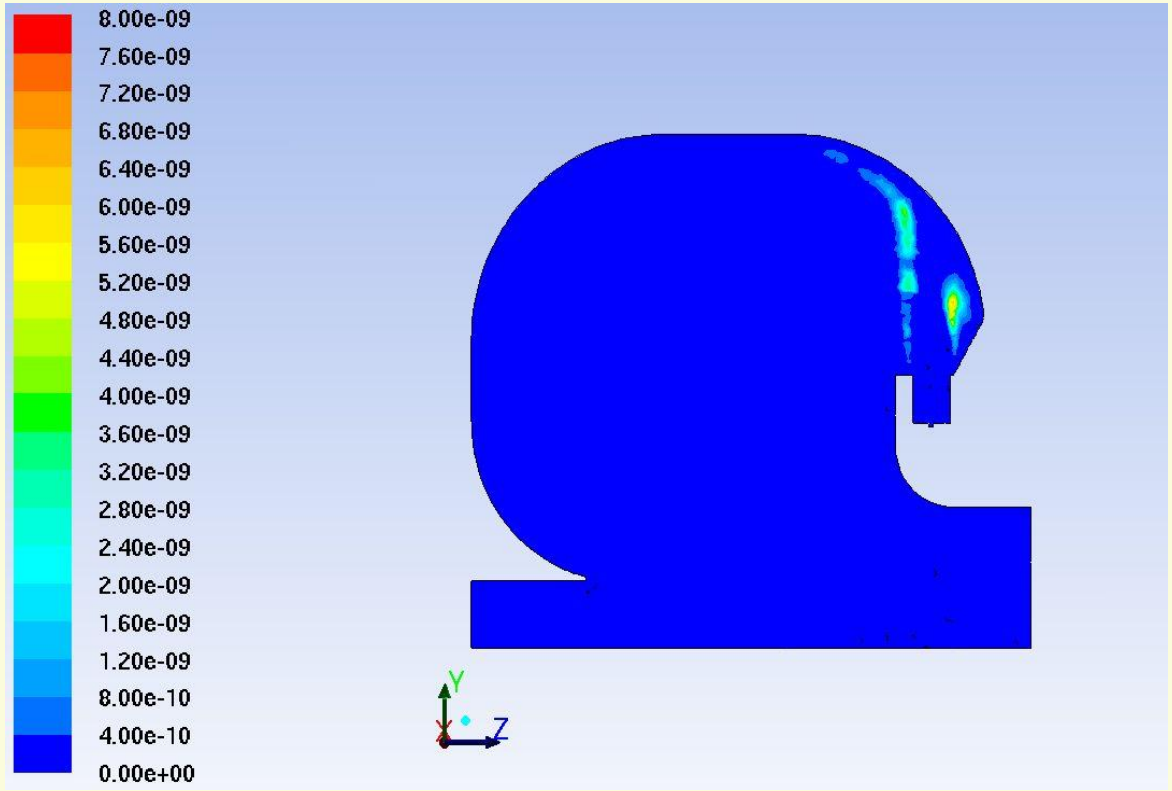

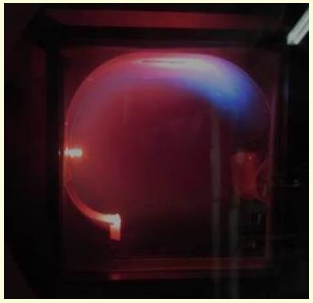

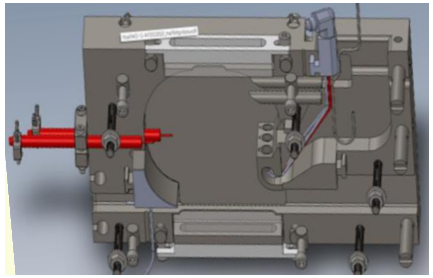

→ Similar pattern of CH* emission between CFD and experiment

CH* mass fraction

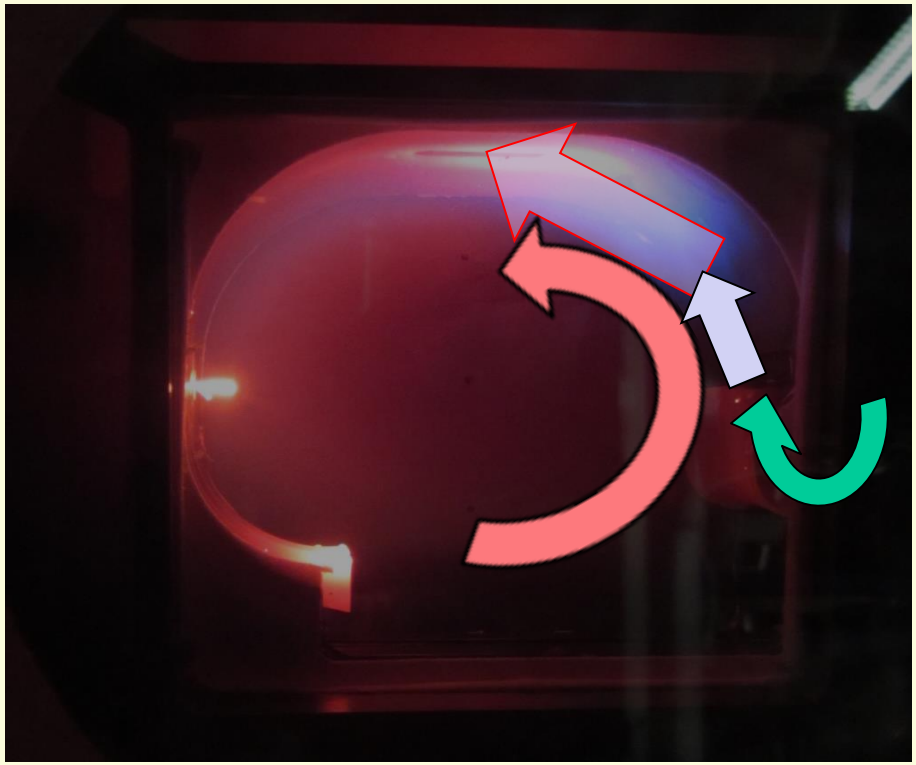

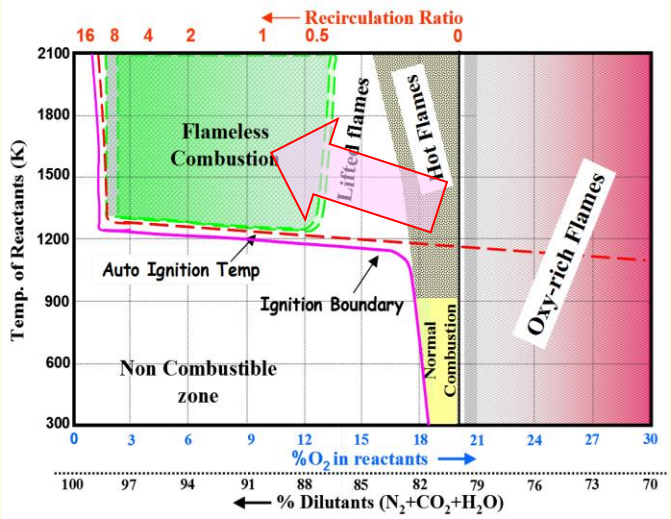

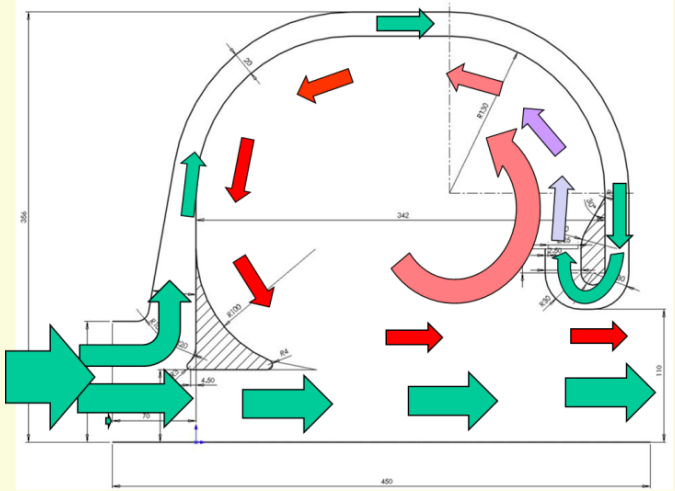

The development of the Flameless Oxidation regime

Turbo and Jet Engine Laboratory
Technion – Israel
www. jet-engine-lab.technion.ac.il

	Oxidant characteristics				Combustor performance			
	O2	N2	H2O	Tin [k]	Texit [k]	CO ppmdv*	UHC ppmdv	NOx ppmdv
CFD simulation	0.190	0.780	0.030	600	825	41	<0.0015	0.016
Experimental results	0.193	0.776	0.031	583	822	22.5	0.7	0.1

Verification of CFD results

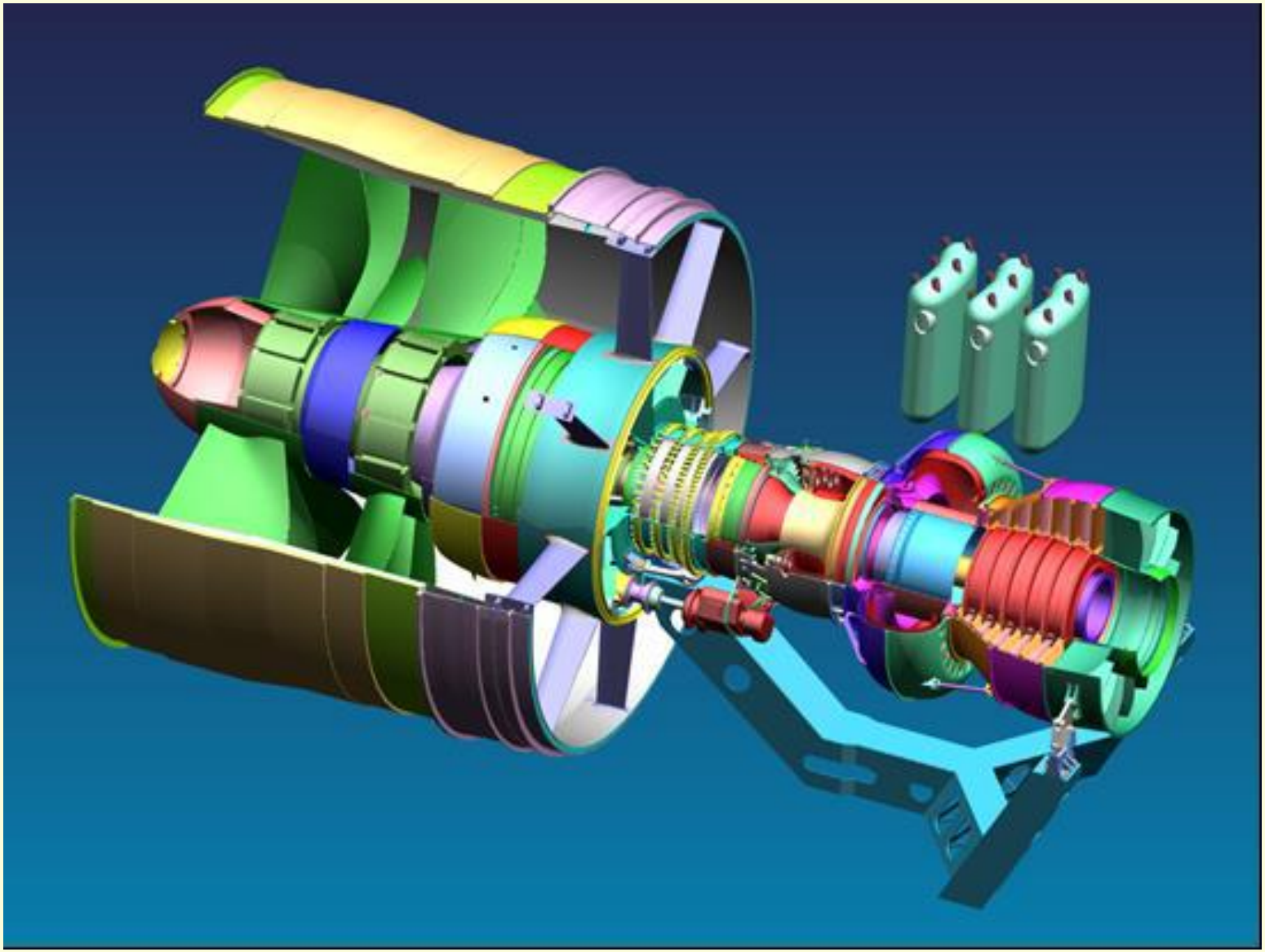

The AHEAD Engine

Summary & Conclusions

- A generic combustor design applying the Flameless Oxidation combustion regime, while using vitiated air was developed and its characteristic were realized using CFD modelling.
- An experimental model of the combustor was built , however with reduced dimensions and for lower operating pressures.
- CFD modelling of the experimental model presented similar results as during experiments, thus validating the ability of the CFD to model such combustor's configuration and combustion regime.
- This confirm the feasibility of the suggested combustion configuration for the AHEAD hybrid engine.

Thank You.....!

COMBUSTOR DESIGN BASED ON CHEMKIN AND CFD SIMULATIONS (contd..)

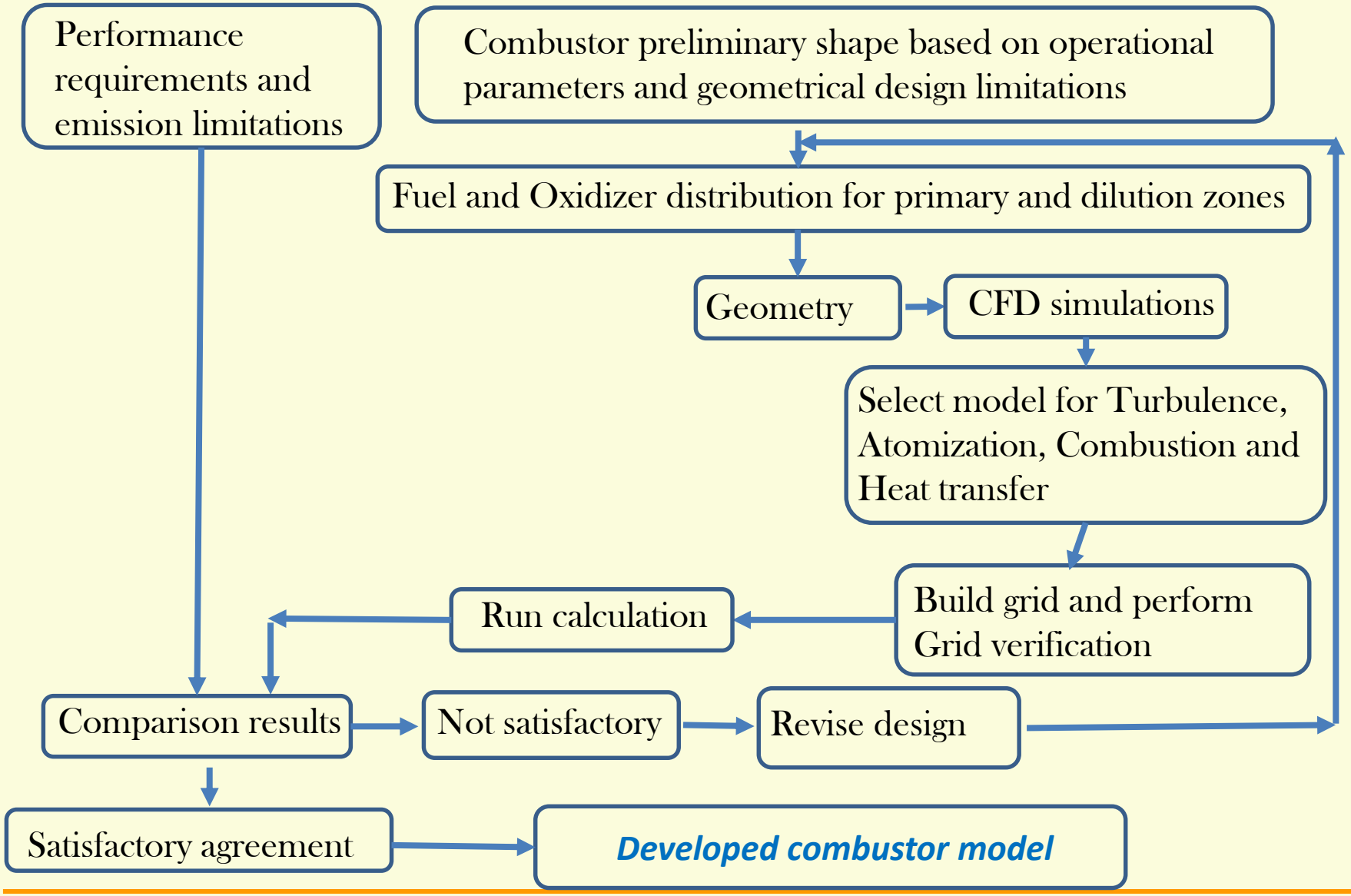

LH2 COMBUSTOR

JP8/BIO-JET FUELED COMBUSTOR

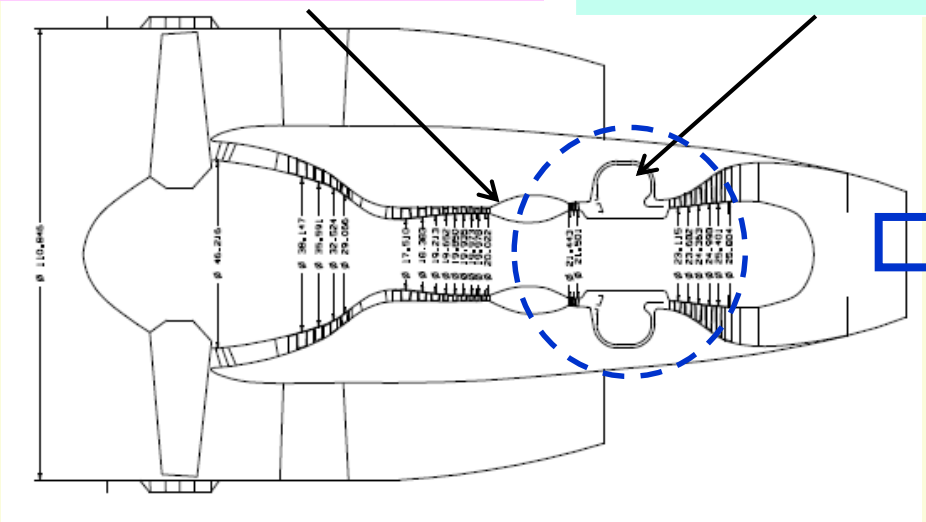

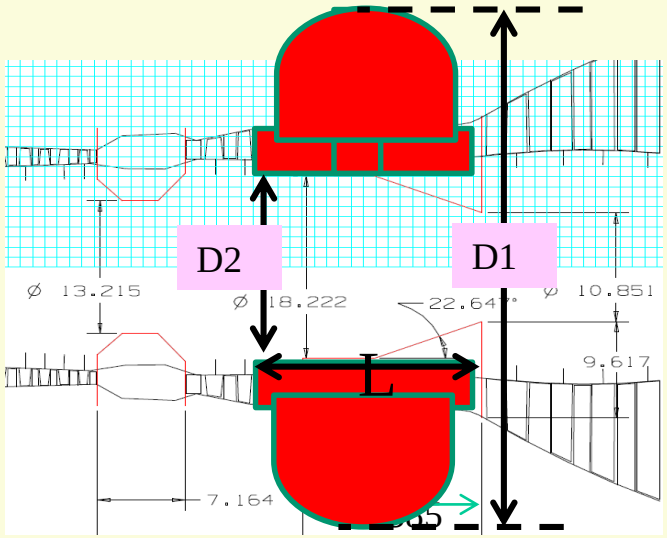

- LNG/ LH2 Main Combustor
- Kerosene/ Biofuel Secondary Flameless Combustor
- Bleed air cooled by LH2
- Shrouded fans
- Higher Specific Thrust
- Low Installation Penalty

Emissions under FLAMELESS conditions

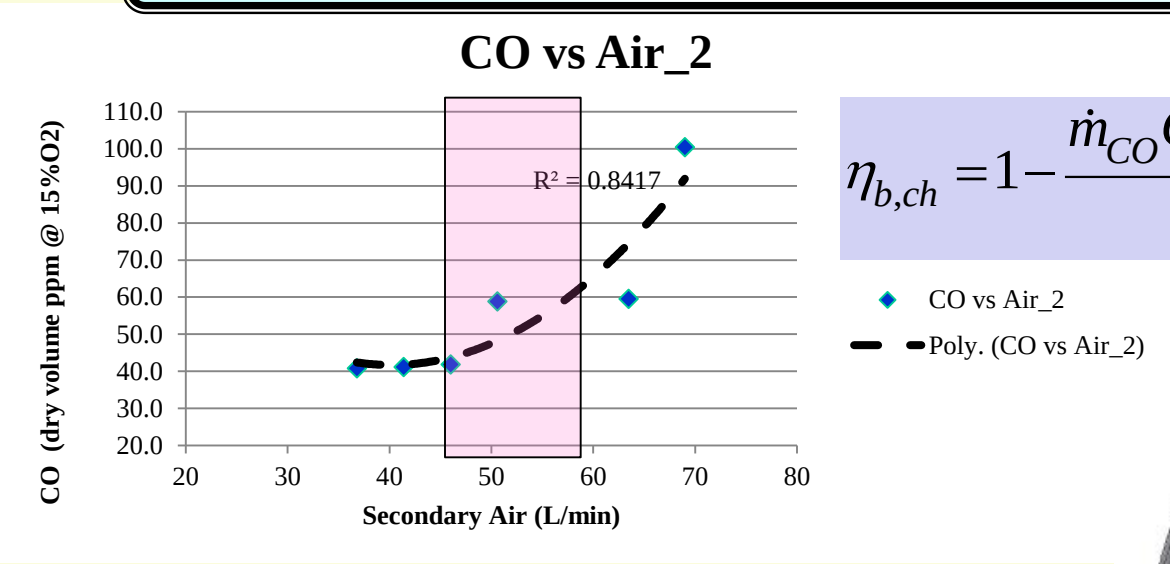

$$\eta_{b,ch} = 1 - \frac{\dot{m}_{CO} Q_{R,CO} + \dot{m}_{UHC} Q_{R,UHC}}{\dot{m}_f Q_{R,F}} \rangle 99.9\%$$

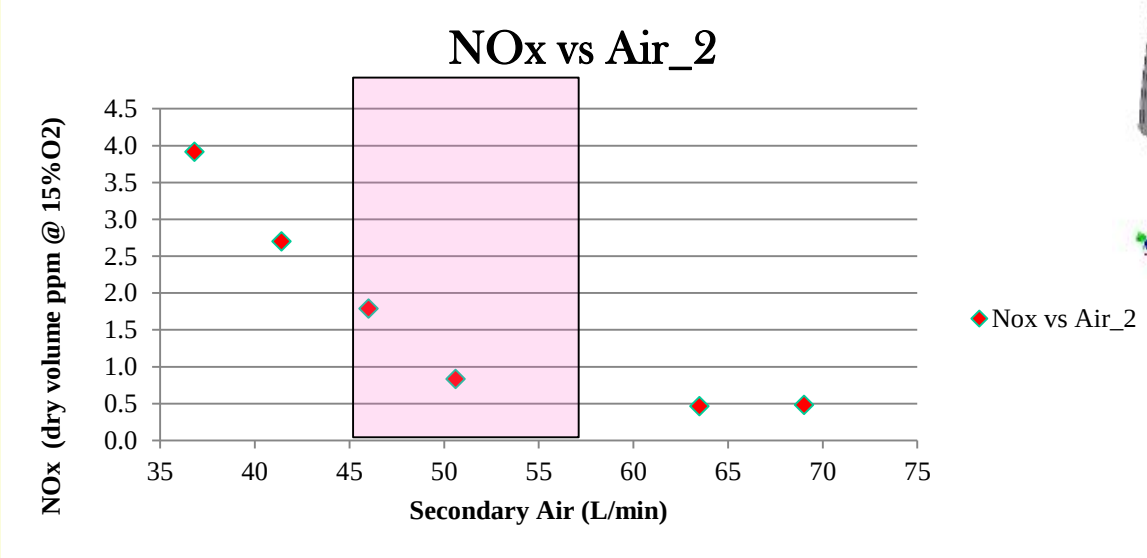

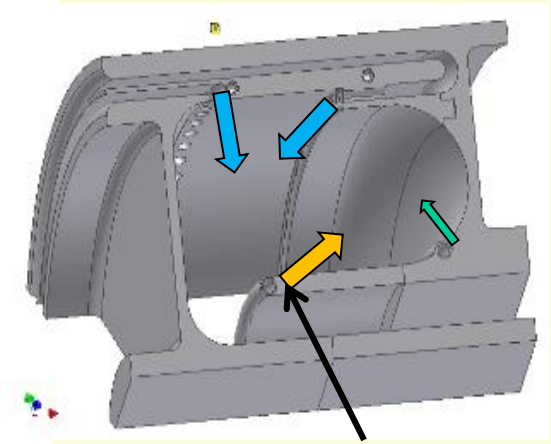

Secondary Air

Towards complete Flameless combustion

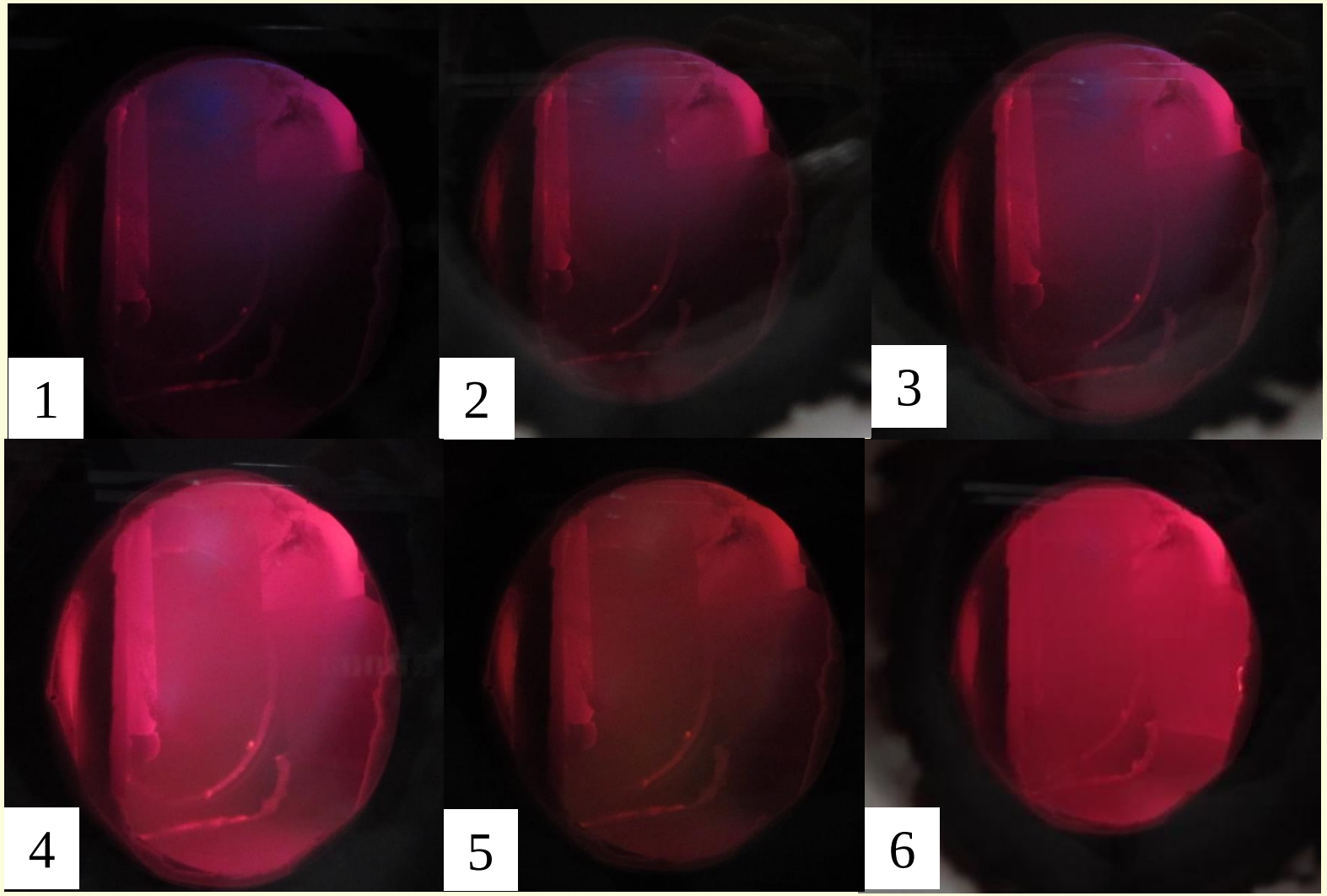

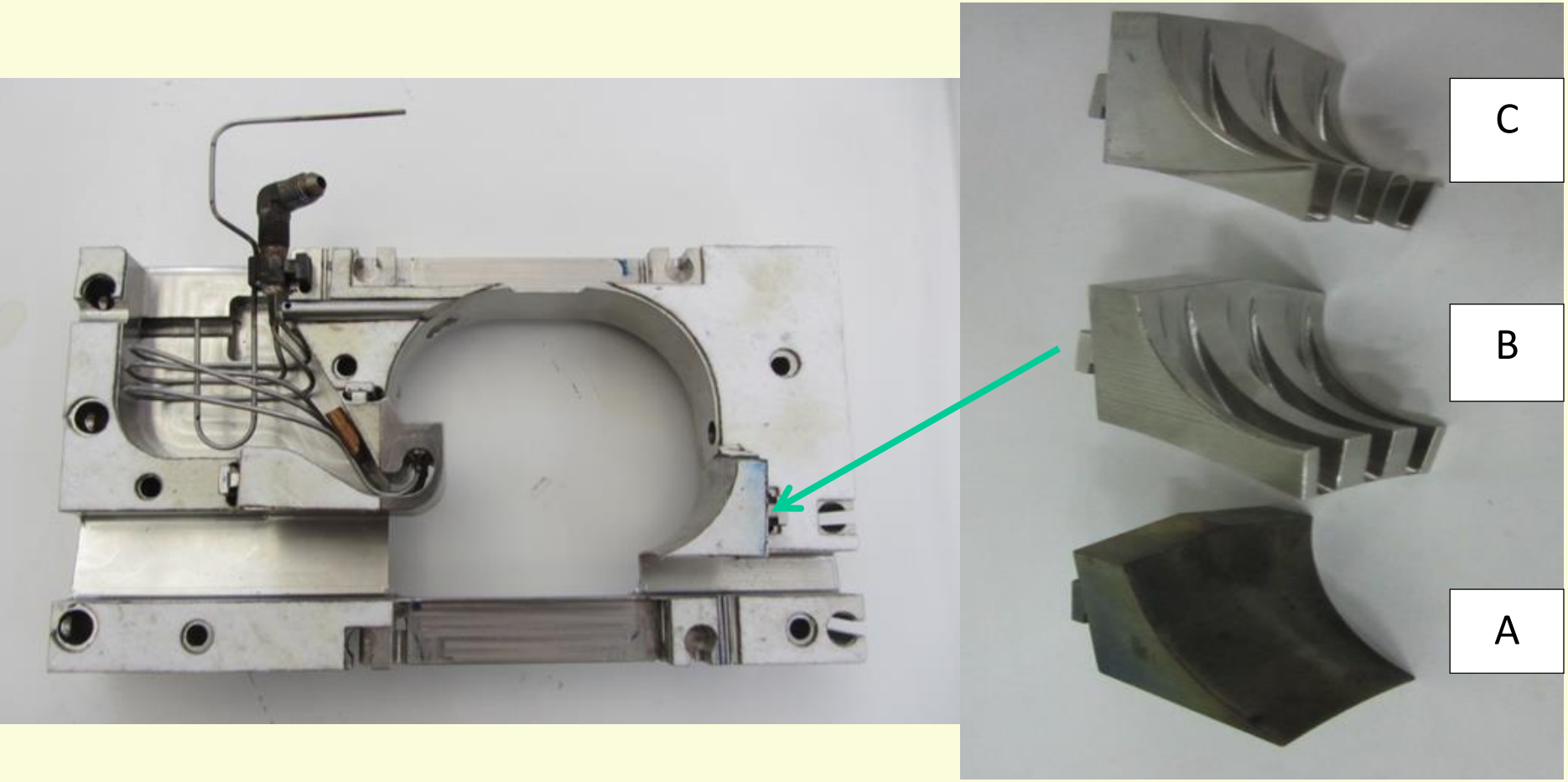
C
B
A